CircuitLab & Op-Amps

ECE 401 Senior Design I

Week #4

Please visit Bison Academy for corresponding lecture notes,
homework sets, and videos
www.BisonAcademy.com

CircuitLab and Simulations

CircuitLab is a circuit simulator, which is very similar to SPICE or PSPICE, and has a graphical front end. The graphical front end makes CircuitLab very easy to use.

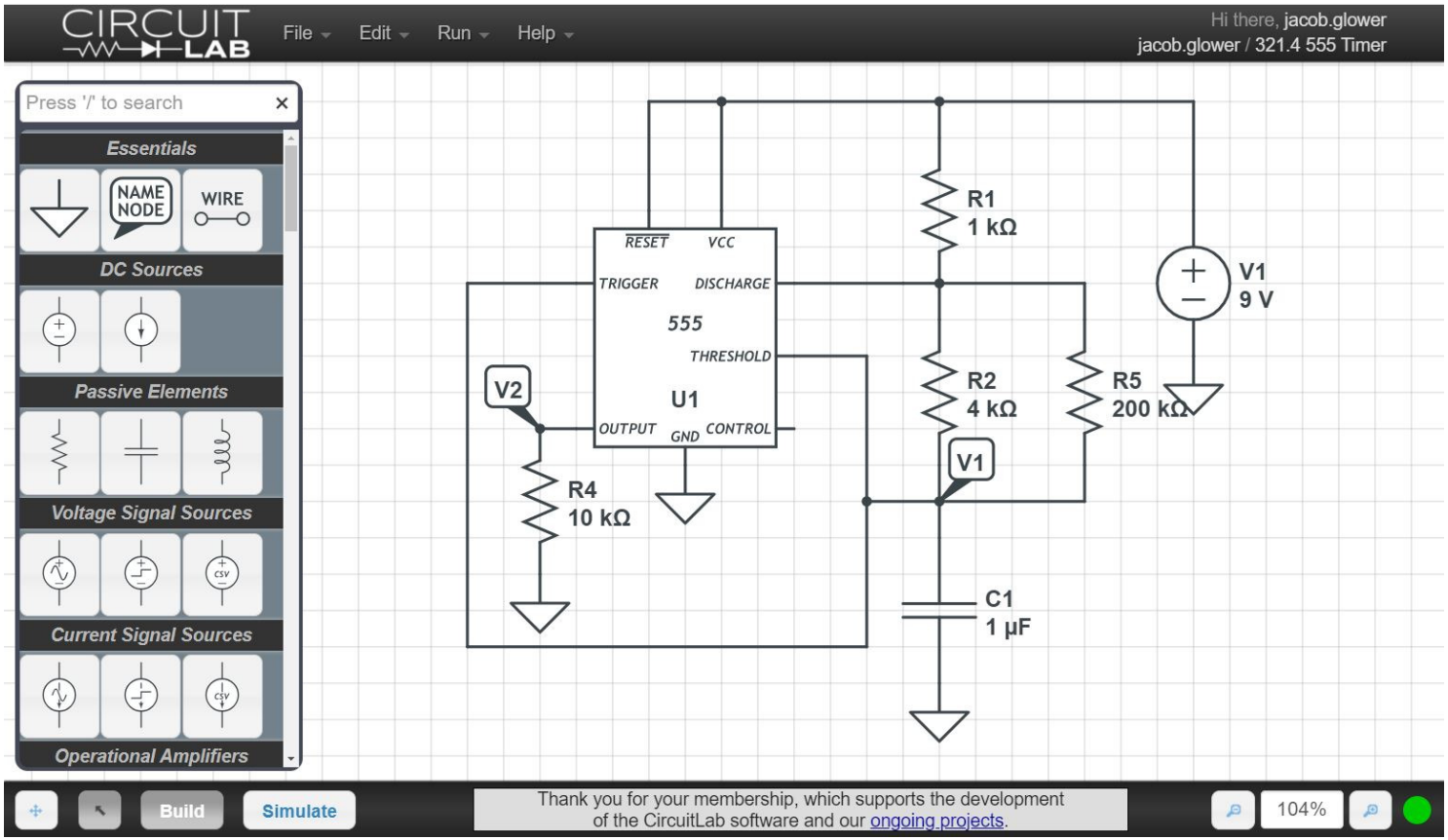

What CircuitLab Does

Lets you check your design using a nonlinear circuit simulator.

- Hand Calculations: Usually make approximations
  - Ideal Diode
  - Vce(sat) = 0.2V
- CircuitLab: More accurate, nonlinear models

Lets you adjust your circuit if necessary

- Tweak to set the current through the diodes to 10mA
- Tweak to set the duty cycle to 50%
- etc.

Once your design is finalized, you can build it on a breadboard

Classes where CircuitLab is Useful

Circuits I and II

- Linear Circuits

Electronics I and II

- Nonlinear Circuits

Digital Systems

- Boolean Logic
- Controls Systems
- Dynamic Systems

Likewise, CircuitLab is pretty useful

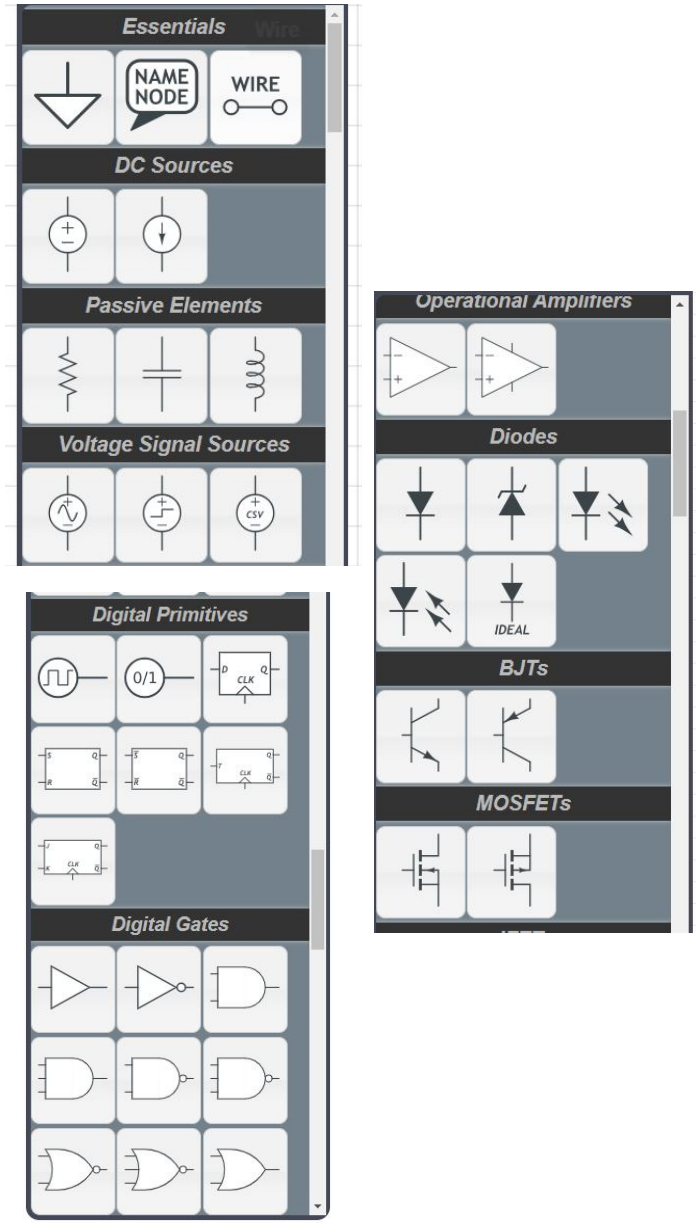

Signing Up for CircuitLab

There are several ways you can use CircuitLab:

- Trial Version: If you don't register or sign in, you're using the trial version. This limits you to 1/2 hour per session and you cannot save your work.
- Free Version: Register with CircuitLab using your NDSU email address (@ndsu.edu). The ECE department pays for a site license - so all NDSU students can use CircuitLab for free. There is no time limit and you can save your work.
- Personal Version: Sign up with your personal email account at a cost of $24/year. Again, there is no time limit and you can save your work. Plus, you still have your work after you graduate.

Operational Amplifiers (Op-Amps)

One of the requirements for your 401 project is it must include an integrated circuit (IC). Usually, this is an op-amp, a 555 timer, or a PIC processor.

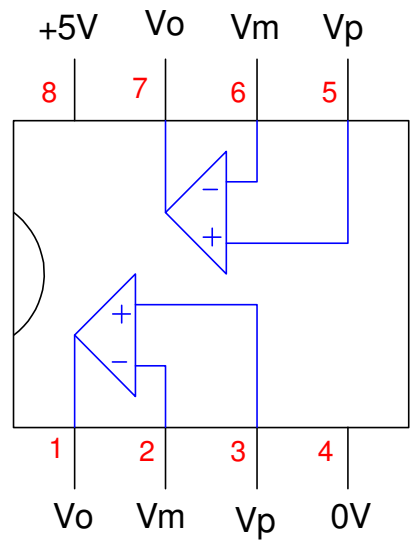

Op-amps are really useful devices that can do all sorts of things. With op-amps, you can build

- Comparitors
- Schmitt Triggers
- Half-wave and full-wave rectifiers,
- Envelope detectors
- Amplifiers
- Filters

to name just a few. Op-amps are just darn useful.

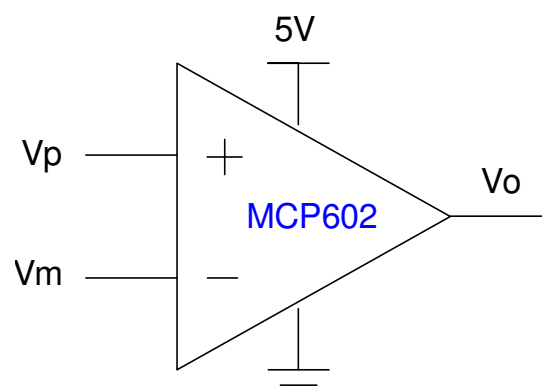

Op-Amps in CircuitLab

Two types of op-amps are available

- No power supply
  - Use for analog circuits (filters, amplifiers, etc)
- +/- Power Supply
  - Use for digital circuits (Comparitors, Schmitt Triggers)

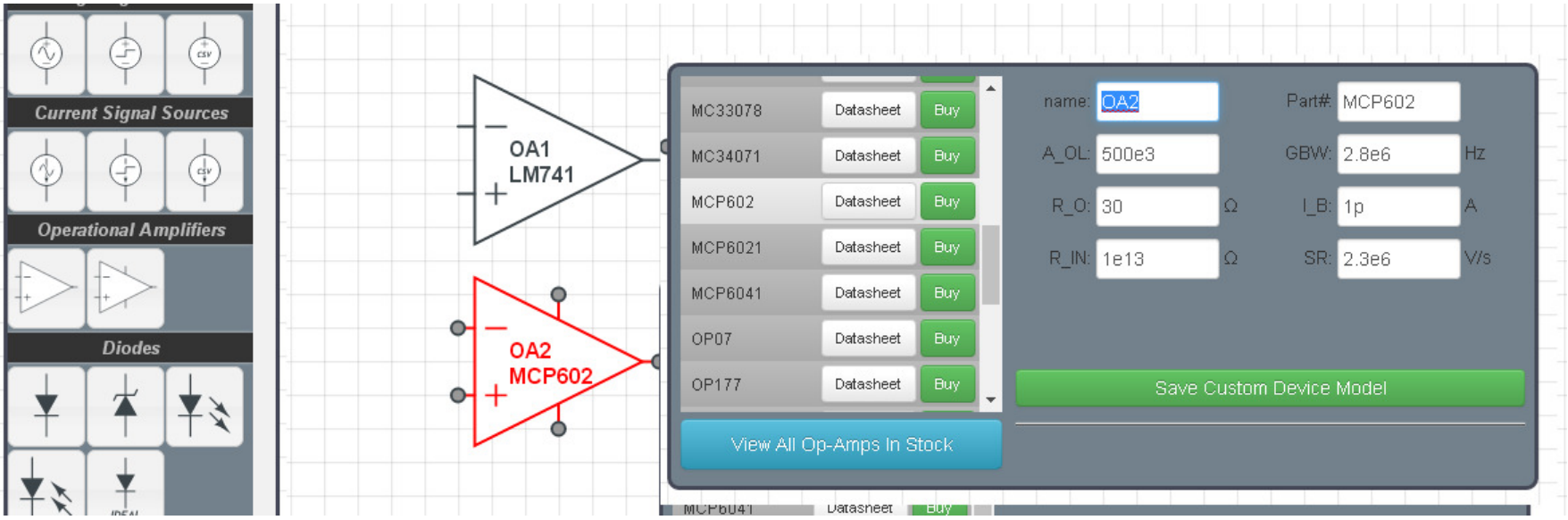

Operational Amplifier Pin-Outs

Op-Amps usually come with two op-amps in an 8-pin package:

- Footprint is usually the same for most 8-pin op-amps
- Allows you to swap them in and out

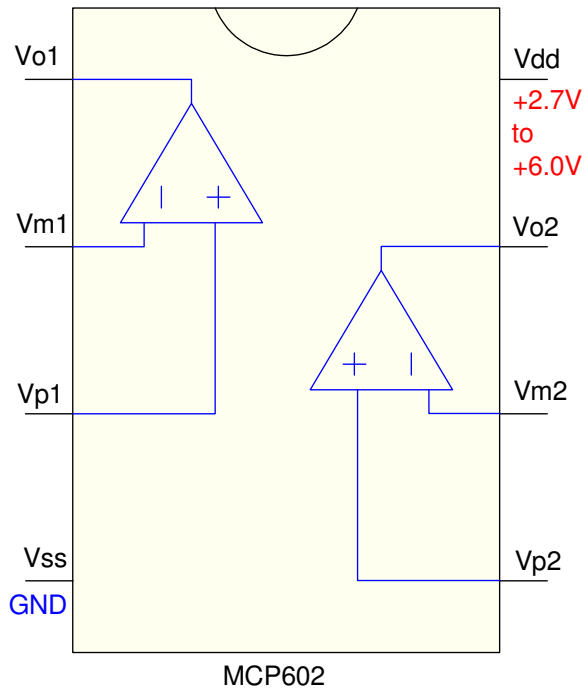

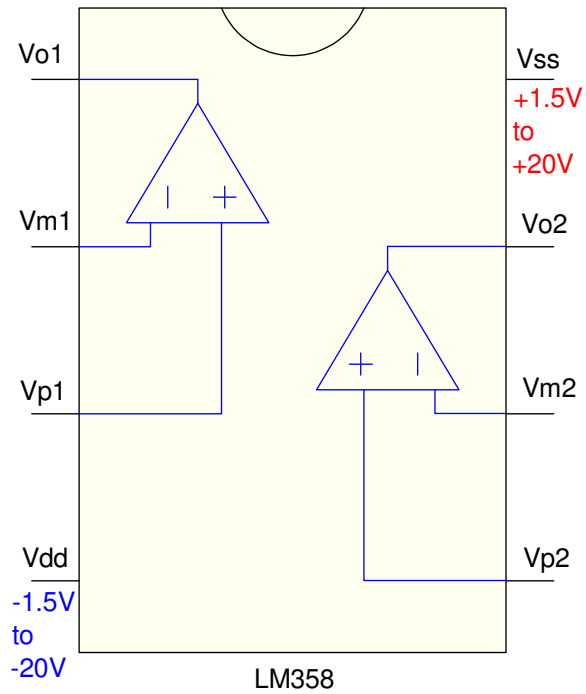

Op-Amp Parameters

Thousands of op-amps are available

ECE standardized on two

- MCP602: Digital circuits
- LM2904 or LM358: Analog circuits

	MCP602	LM2904 / LM358	Ideal
Input Resistance	1e13 Ohms	4G Ohm	infinite
Current Out (max)	25mA	40mA	infinite
Operating Voltage	2.7V - 6V	+/- 1.5V .. +/- 20V	any
Differential Mode Gain	500,000	140,000	infinite
Common Mode Gain	0.00003	0.00002	0
Slew Rate	2.3V/us	0.3V/us	infinite
Gain Bandwidth Product	2.8MHz	1.2MHz	infinite
Operating Range	-40C to +85C	-40C to +85C	infinite
Price (qty 100)	$0.61	$0.12	-

Digital Op-Amp Circuits

- Like lego blocks: Assemble to create a larger circuit

Name	Description	Circuit
Comparitor - Level Shifter (convert 0V/3.3V logic to 0V/5V logic)	Y = (X > 1.5) 5V = true 0V = false	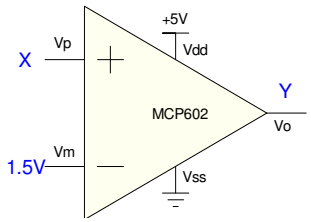
Schmitt Trigger Von > Voff	Set: X > Von Clear: X < Voff	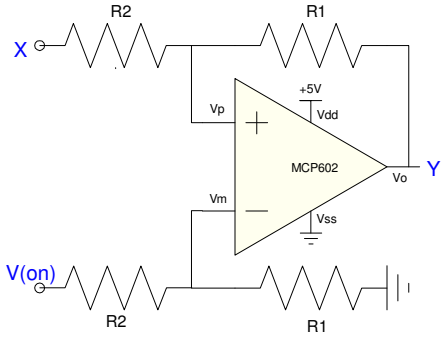
Schmitt Trigger Von < Voff	Set: X < Von Clear: X > Voff	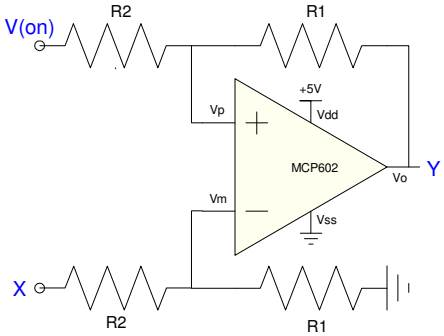

Example 1: Night Light (Comparitor)

Design a circuit so that a Pi-Pico can determine when a room is dark. Assume you have a light sensor with

- R = 3k Ohms (room lights on)
- R = 10k Ohms (room is dark)

Solution: Convert resistance to voltage using a voltage divider. Assume a 5k resistor.

Pick a voltage in-between, such as 2.50V

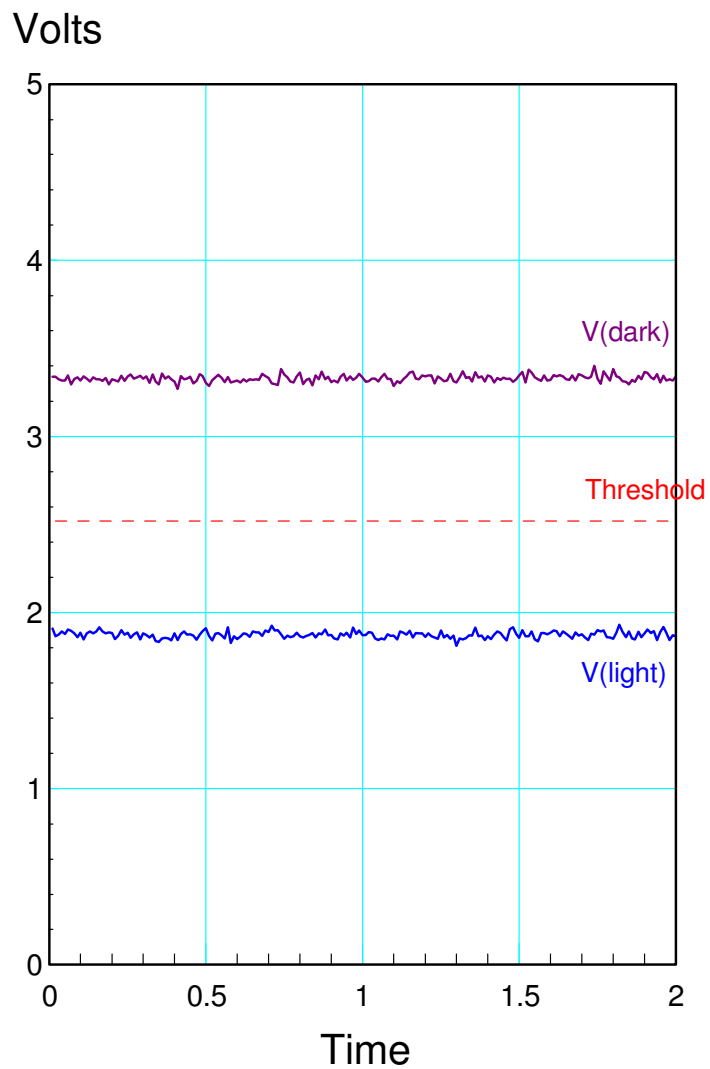

Night-Light Schematics

- Switch at 2.5V
- Drop the output votlage to 3.3V
  - Avoid harming the Pi-Pico

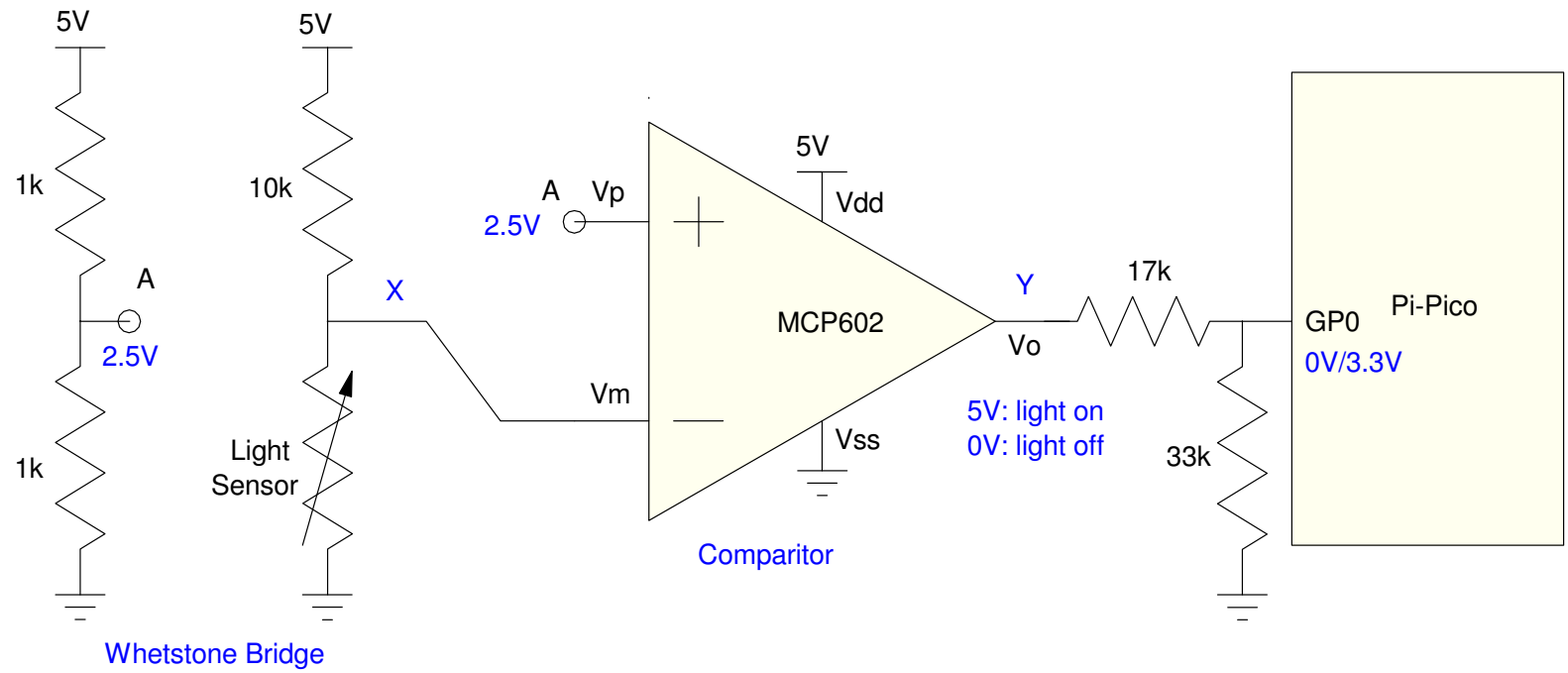

RP2040-Zero Code

Starting Code:

Display the logic levels

- GP14: Push Button
- GP8: Comparitor

Result:

- GP14 pressed: 1st column is 0
- Shadow (GP8): 2nd column is 0

Python Code

```
from machine import Pin
from time import sleep_ms

B0 = Pin(14, Pin.IN, Pin.PULL_UP)
B1 = Pin(8, Pin.IN, Pin.PULL_UP)

while(1):
   X = B0.value()
   Y = B1.value()
   print(X, Y)
   sleep_ms(500)
```

Shell Window

```
1 0
1 0
1 0
1 1
1 1
1 1
0 1
0 1
0 1
1 1
1 1
```

Python Code: NeoPixel

- Red when GP14 is low
- Green when GP8 is low

Python Code	Hardware

```
from machine import Pin, bitstream
from time import sleep

timing = [300, 900, 700, 500]
np = Pin(16, Pin.OUT)

B0 = Pin(14, Pin.IN, Pin.PULL_UP)
B1 = Pin(8, Pin.IN, Pin.PULL_UP)
r = g = b = 0
while(1):
    if(B0.value() == 0):
        r = 20
    else:
        r = 0
    if(B1.value() == 0):
        g = 20
    else:
        g = 0
    color = bytearray([g,r,b])
    bitstream(np, 0, timing, color)
    print(r,g,b)
    sleep(0.1)
```

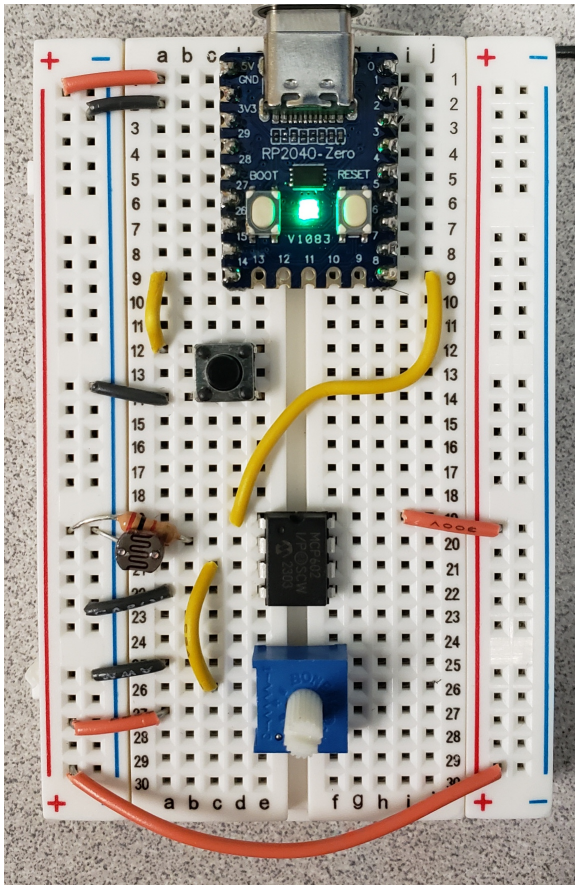

Python Code: Count Edges

- Count falling edges on GP14 & GP8

Python Code

```
while(1):
    :
    :

    zA = A
    A = B0.value()
    zB = B
    B = B1.value()

    if( (A==0)*(zA==1) ):
        CountA += 1
        flag = 1
    if( (B==0)*(zB==1) ):
        CountB += 1
        flag = 1
    if(flag == 1):
        print(CountA, CountB)
        flag = 0
```

Shell Window

```
MPY: soft reboot
0 1
0 2
0 3
0 4
1 4
2 4
3 4
4 4
5 4
```

CircuitLab Schematic

Use an op-amp with voltages specified

- Determines logic level 1 and 0

Sweep the voltage at X

- Does it switch at 2.5V?

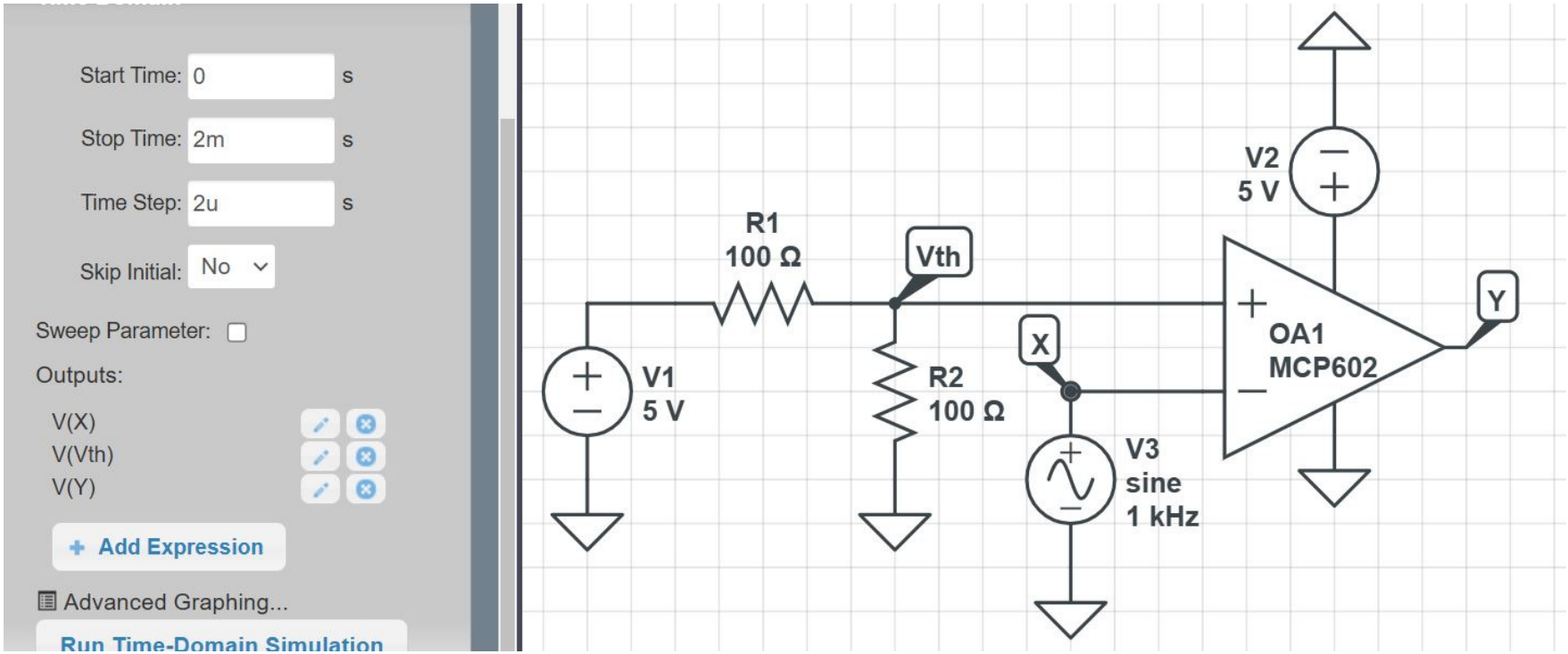

CircuitLab: Simulation Results

Run a time-domain simulation

- 2ms (two cycles)
- 2us step size (1000 points per plot)\

Result

- Turns on at 2.5V & turns off at 2.5V

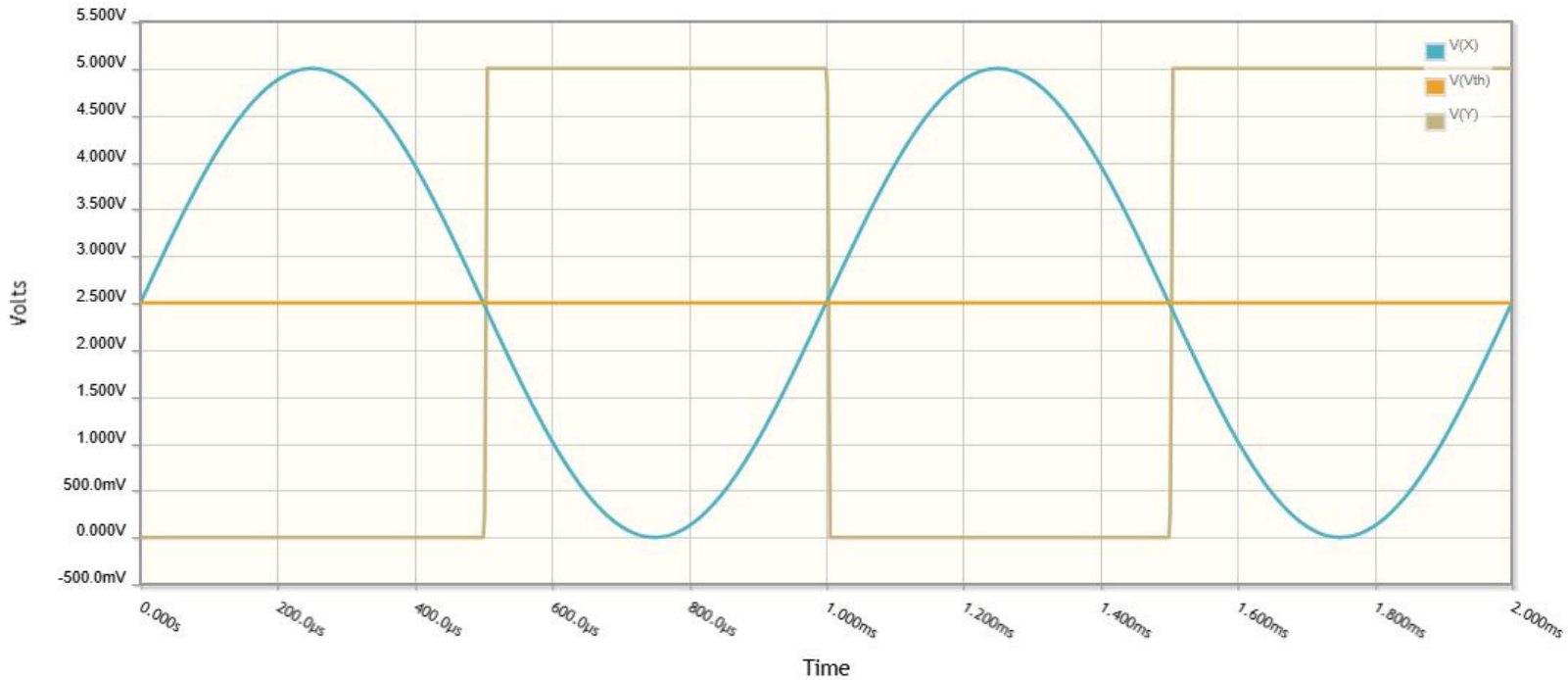

Example 2: Night Light (Schmitt Trigger)

Noise on the signal can create chatter when switching

- Add hysteresis to prevent this

Let the on-off voltages be

- V(on) = 2.4V
- V(off) = 2.8V

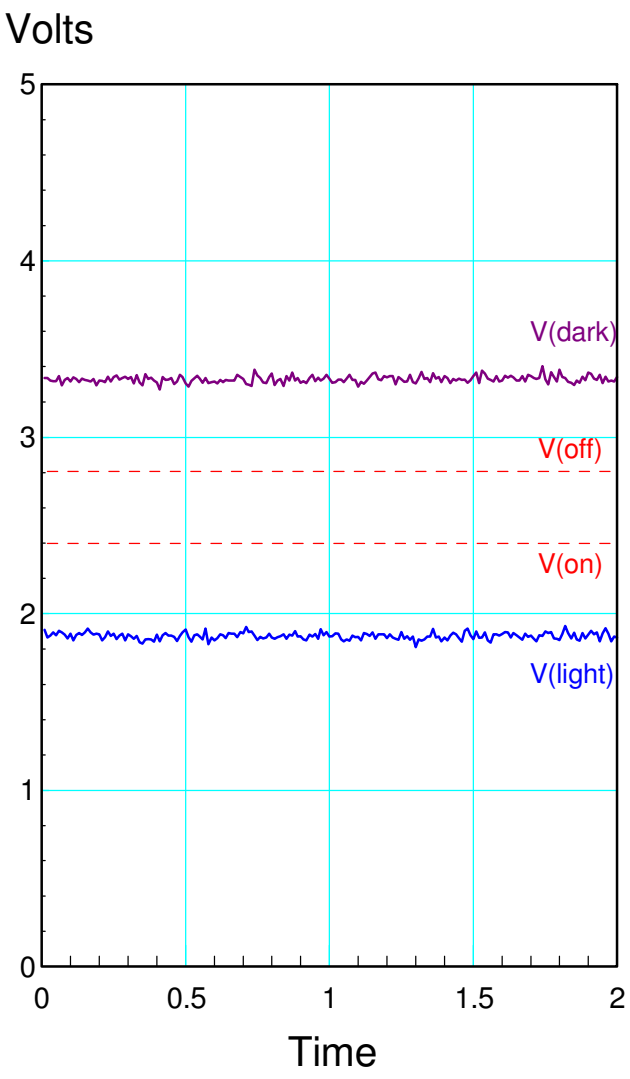

Schmitt Trigger: Calculations

- Connect to the minus input (when X goes high, Y goes low)
- V(on) = 2.40V
- Gain = (5V - 0V) / (2.8V - 2.4V) = 12.5

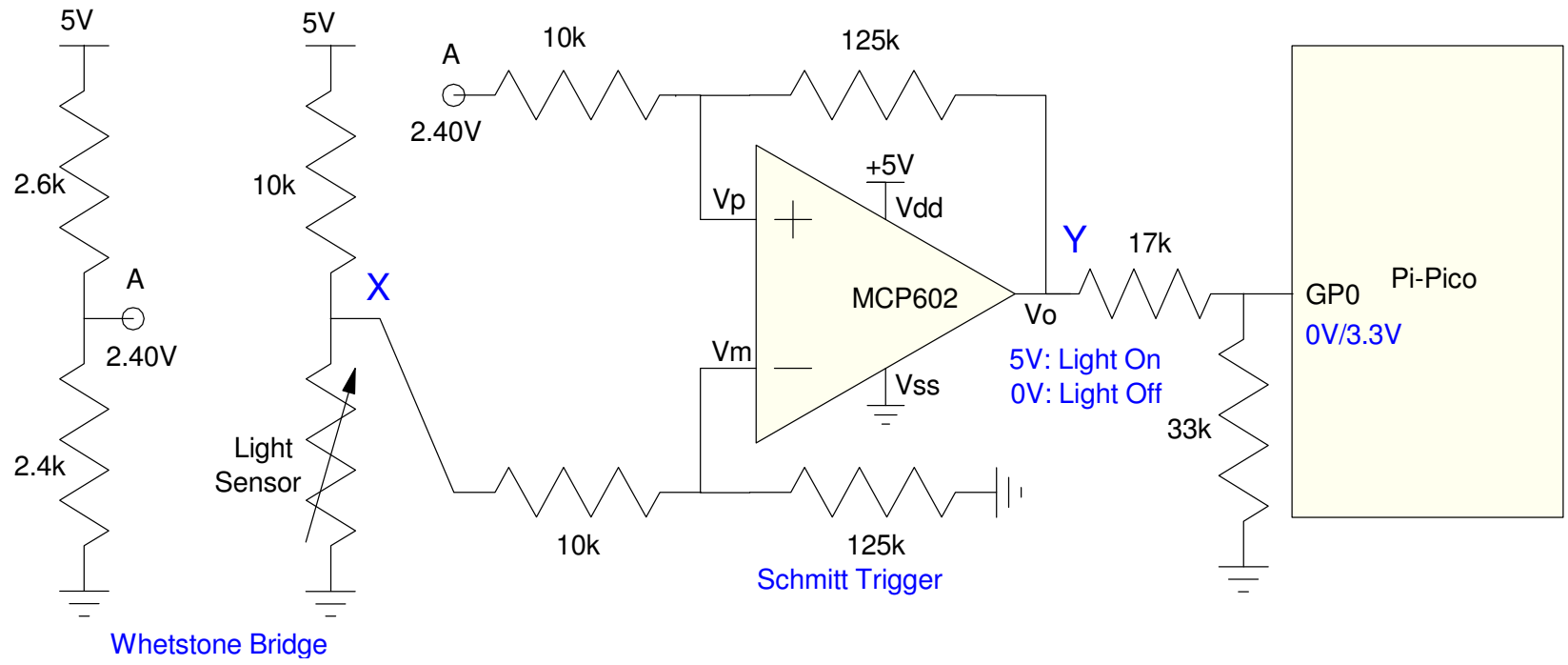

CircuitLab Schematic

Sweep the voltage at X using a sine wave source

- Does Y turn on at 2.4V?
- Does Y turn off at 2.8V?

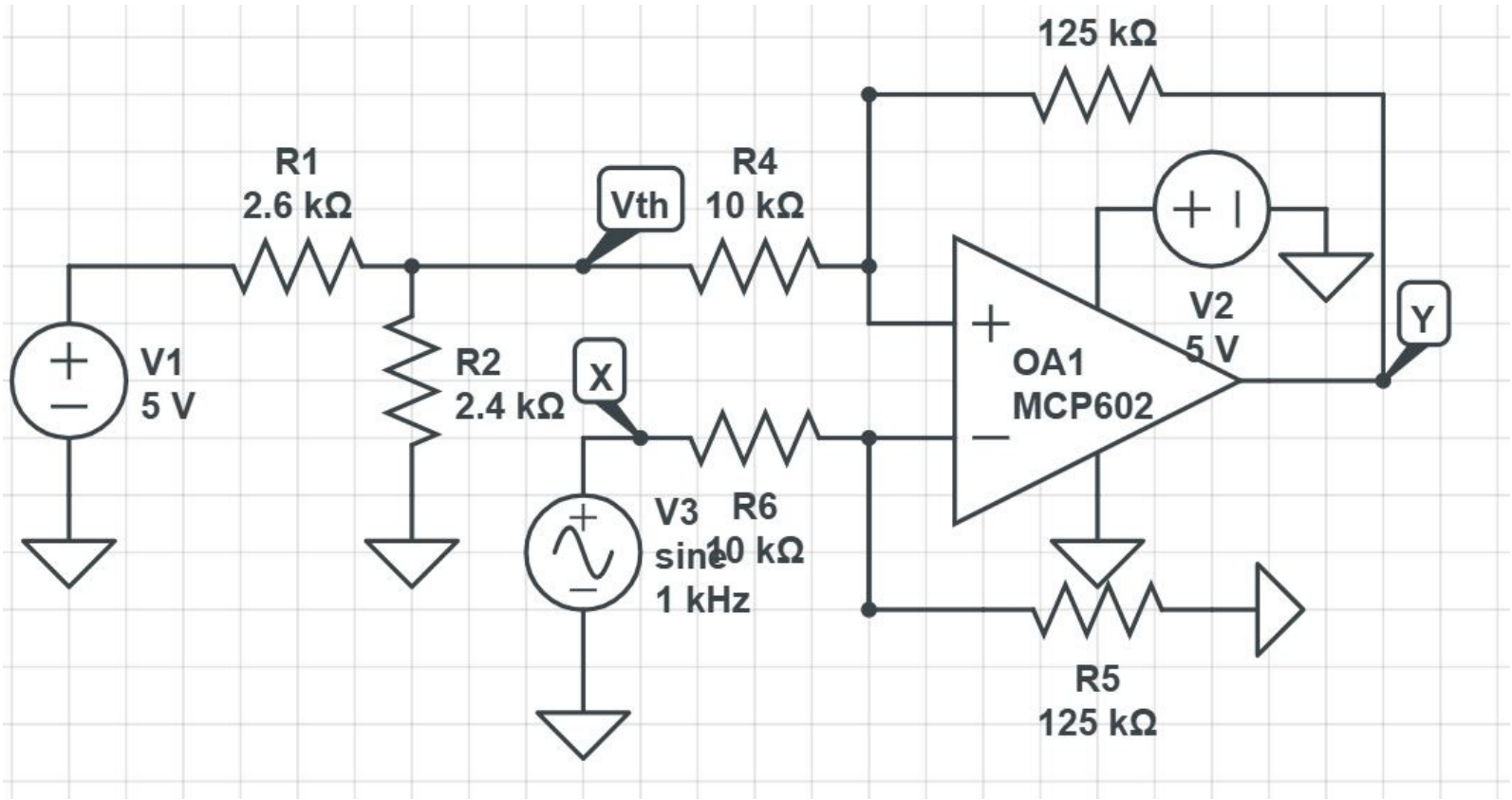

CircuitLab Simulation Results

Run a time-domain simlation

- 2ms period (two cycles)
- 2us step size (1000 points per plot)
- On & off votlages as expected

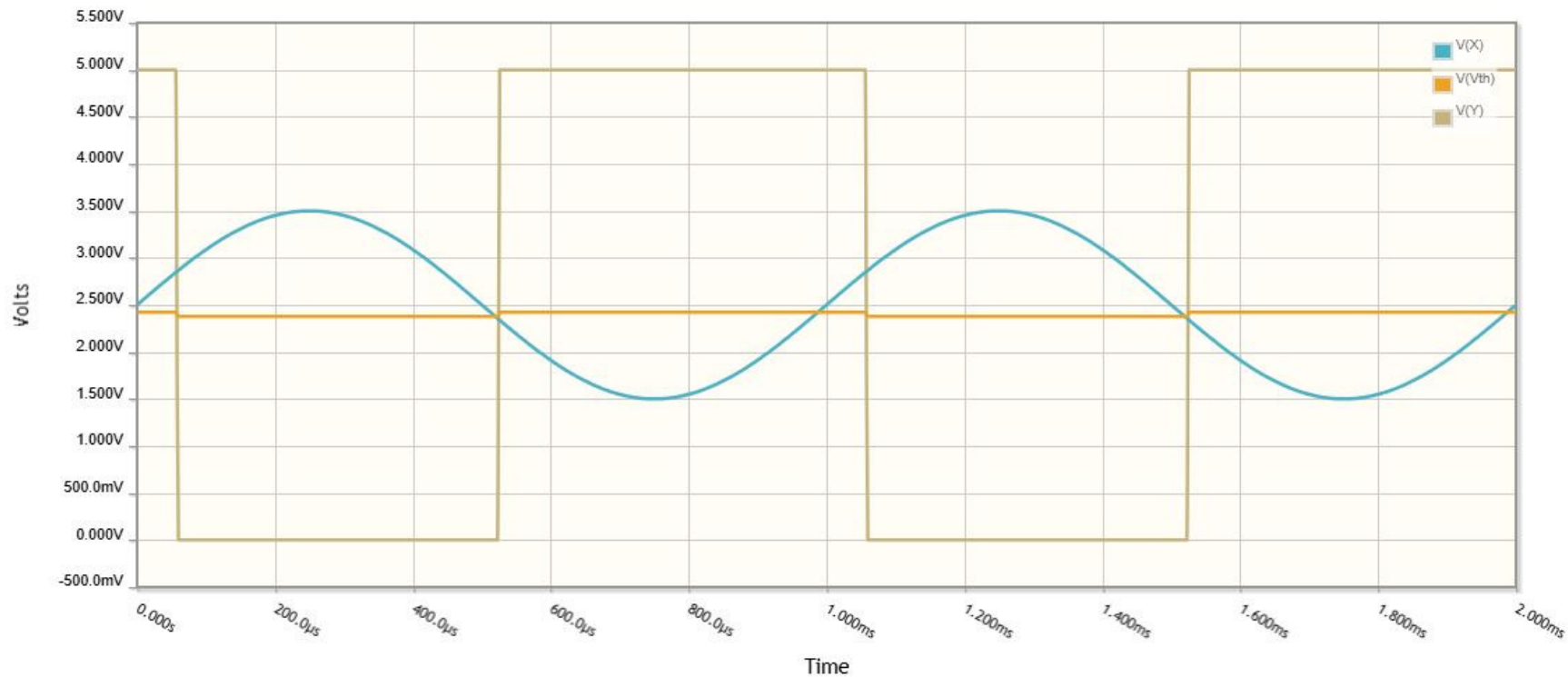

Op-Amp Circuits with Analog Outputs (Amplifiers)

Buffer: Y = X

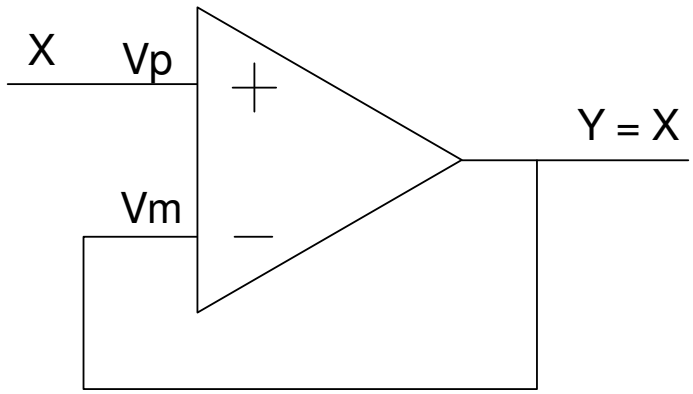

Non-Inverting Amplifier: Y = (1 + R1/R2)*X

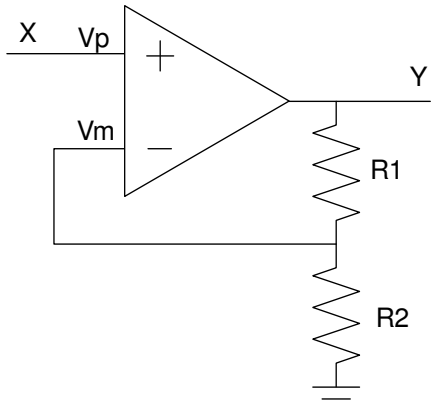

Inverting Amplifier: Y = -(R1/R2) X

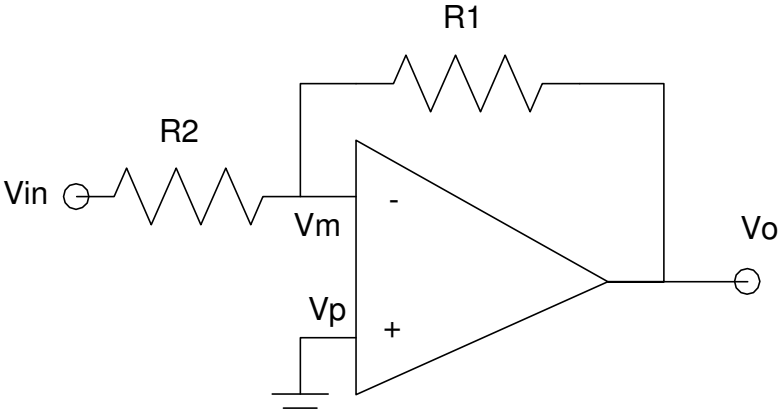

Instrumentation Amplifier: Y = (R1/R2)*(A-B)

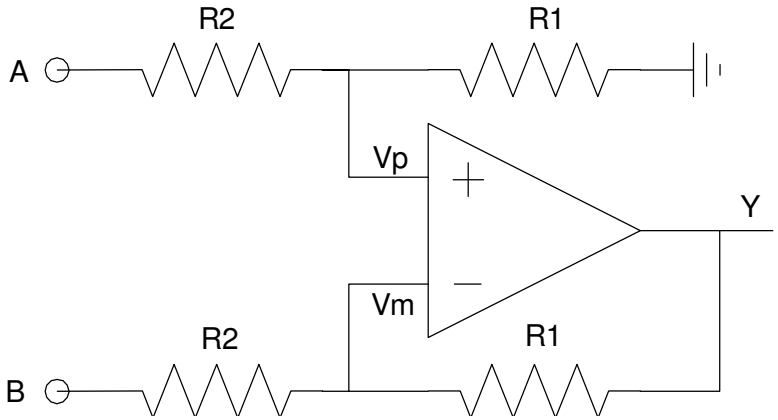

Equations for Op-Amp Amplifiers:

Voltage nodes tends to work best

- Vp = Vm (1st equation)
- Voltage nodes to get the rest

Example:

- Vp = Vm
- $\left(\frac{V_p - A}{R_1}\right) + \left(\frac{V_p}{R_2}\right) = 0$
- $\left(\frac{V_m - B}{R_1}\right) + \left(\frac{V_m - Y}{R_2}\right) = 0$

Do some algebra

$$Y = \left(\frac{R_2}{R_1}\right)(A - B)$$

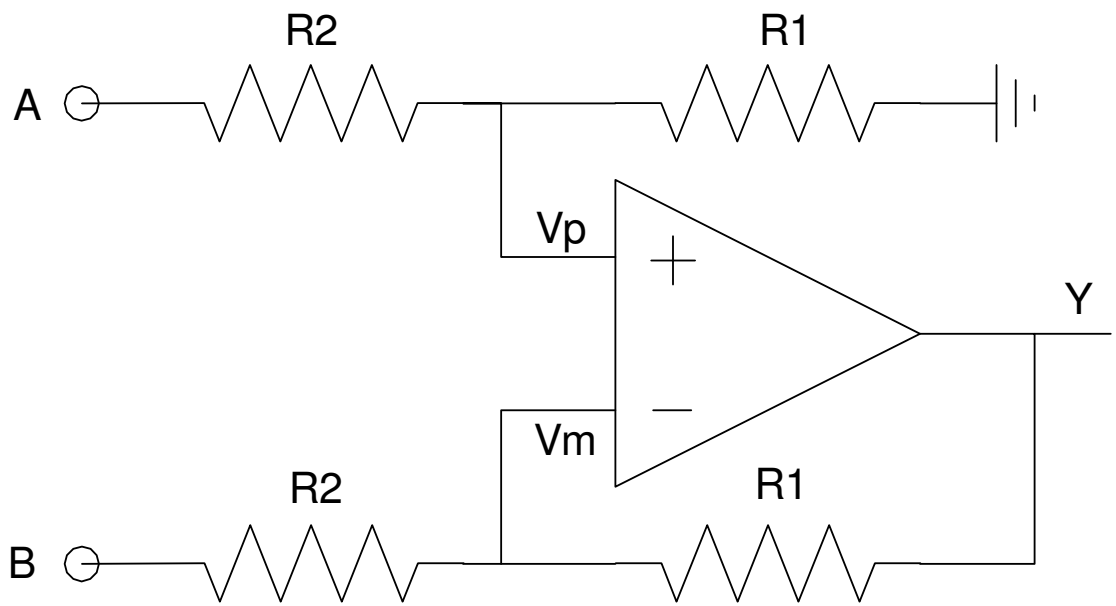

Example 1: Current Sensor

Problem: Measure current

Assume

- The current is 0 - 100mA
- The output is 0V - 3.3V

Solution:

- A 1 Ohm resistor converts I to V
- An amplifier converts 100mV to 3.3V
  - Gain = 33

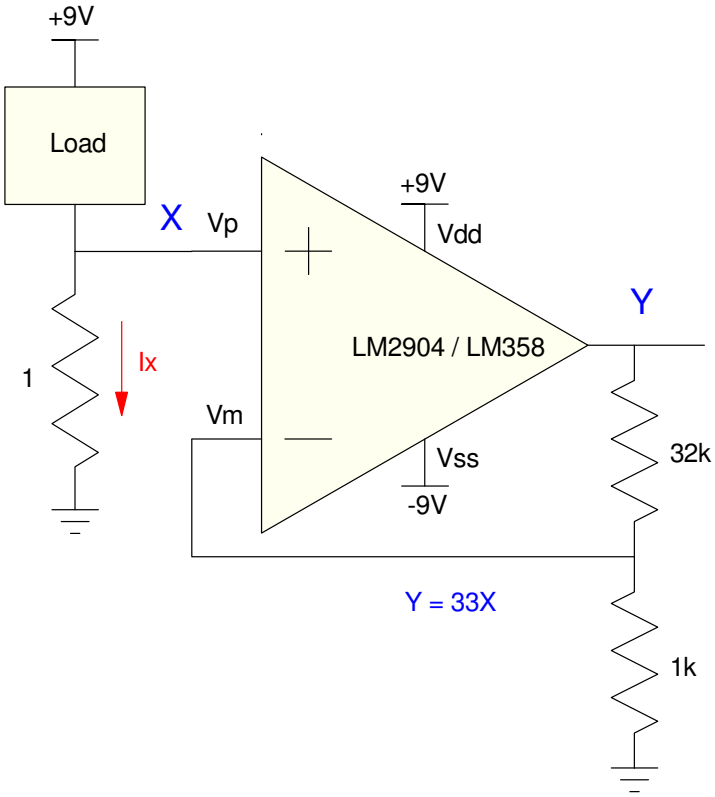

CircuitLab Schematic

- 10V & 100 Ohms sets the max current to 100mA
- Sine wave sweeps current from -100mA to +100mA
- Check voltage at Y

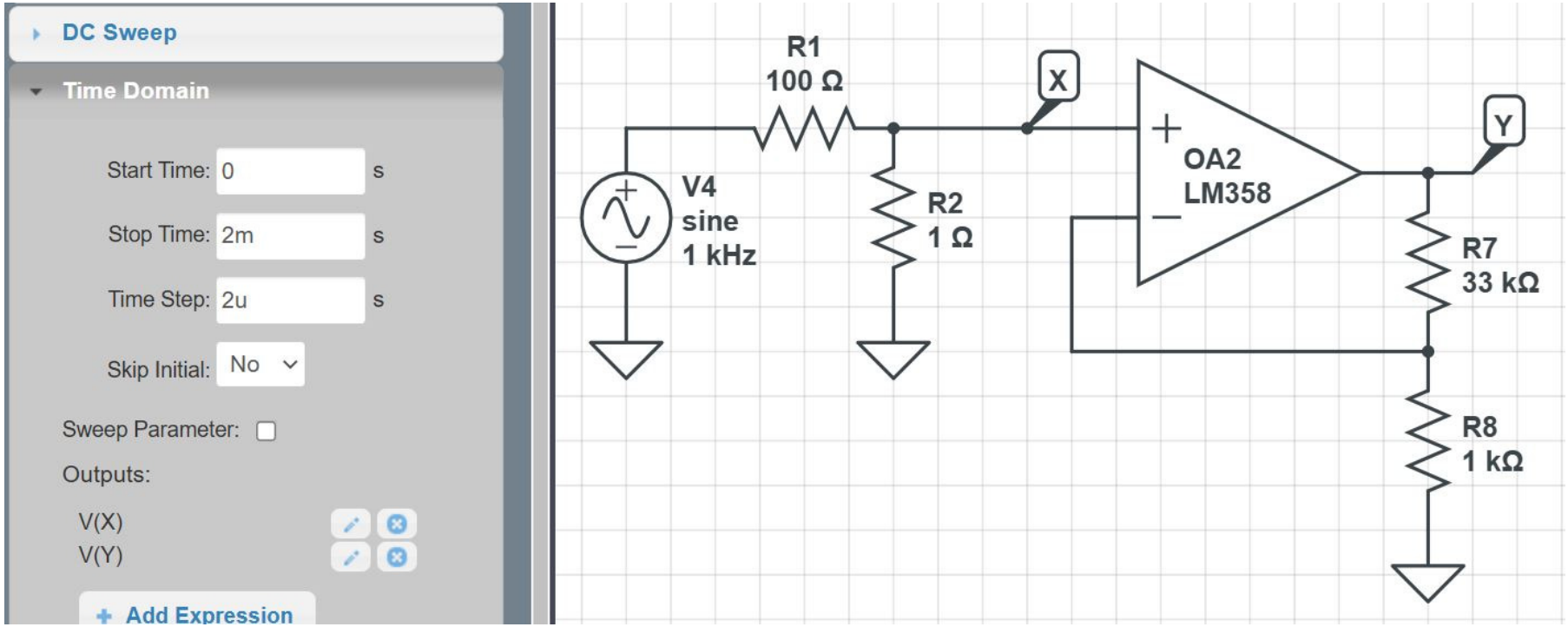

CircuitLab Simulation Results

Voltage at Y is a sine wave

- The amplifier is working

Peak voltage is 3.3V

- 100mA = 3.3V

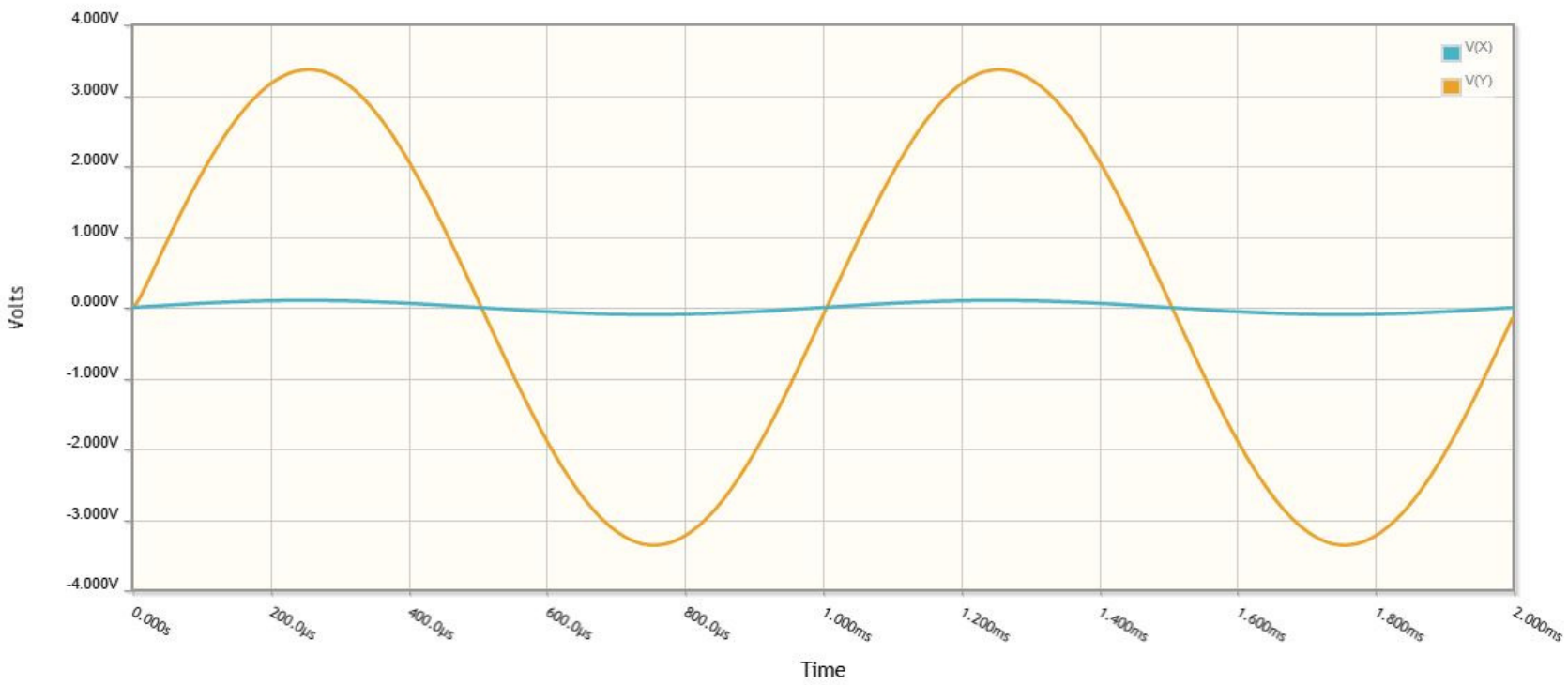

Example: Current Sensor (take 2)

Measure the current going to a lithium battery. Assume

- The current can be in the range of -2A to +2A.
- The output voltage should be -2V to +2V

Solution:

- Use a 0.1 Ohm current sensing resistor
- Use an instrumentation amplifier to cancel out the offset

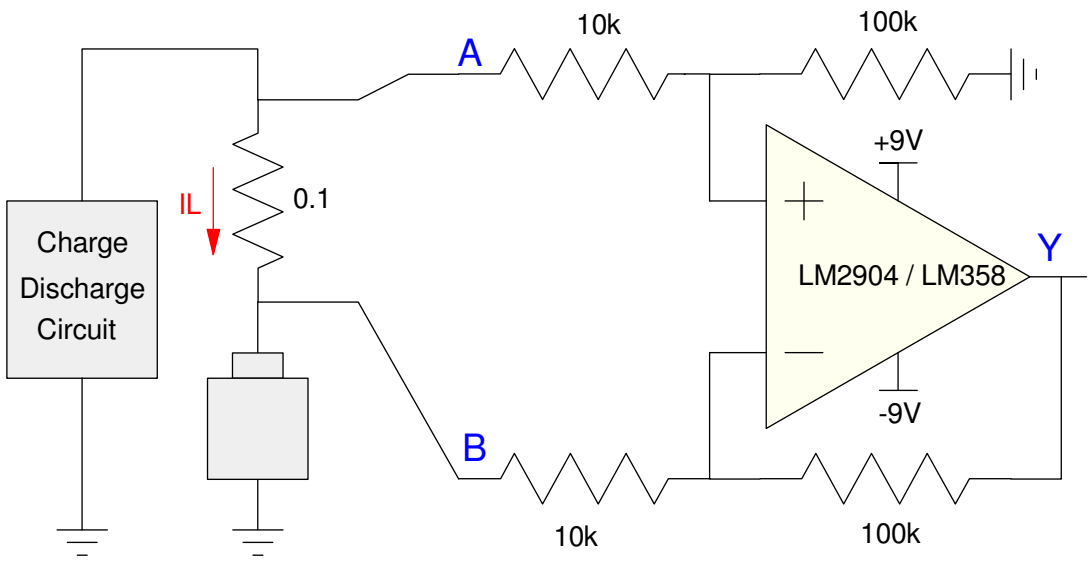

Y = 10(A - B)
Instrumentation Amplifier

CircuitLab Schematic

Use a 10Vp source with 10 Ohms to set the max current to 1A

Use a sine wave to sweep current from -1A to +1A

Split the 10 Ohms to check how the circuit handles a DC offset

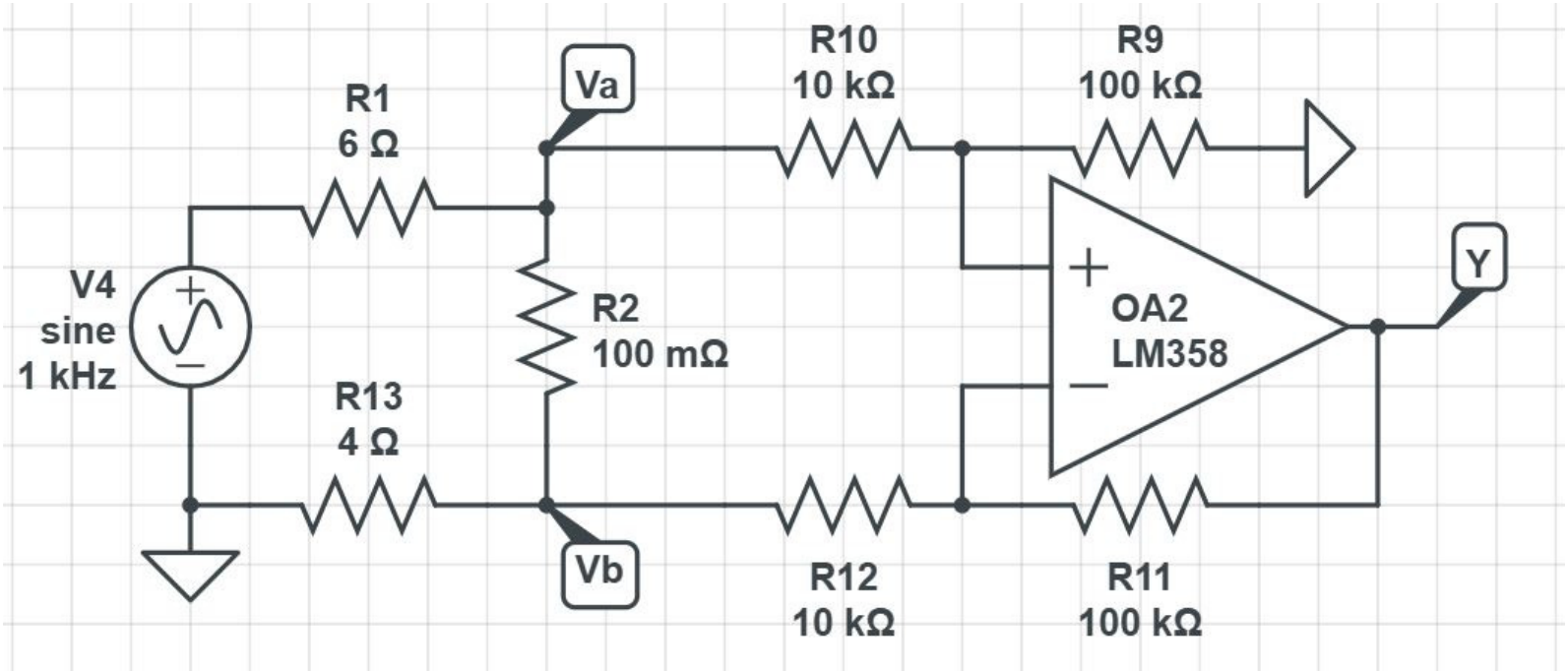

CircuitLab Simulation Results

Time-domain simulation

- 2ms duration (2 periods)
- 2us step size (1000 points)

Output is a sine wave (good) with the correct amplityde (1Vp)

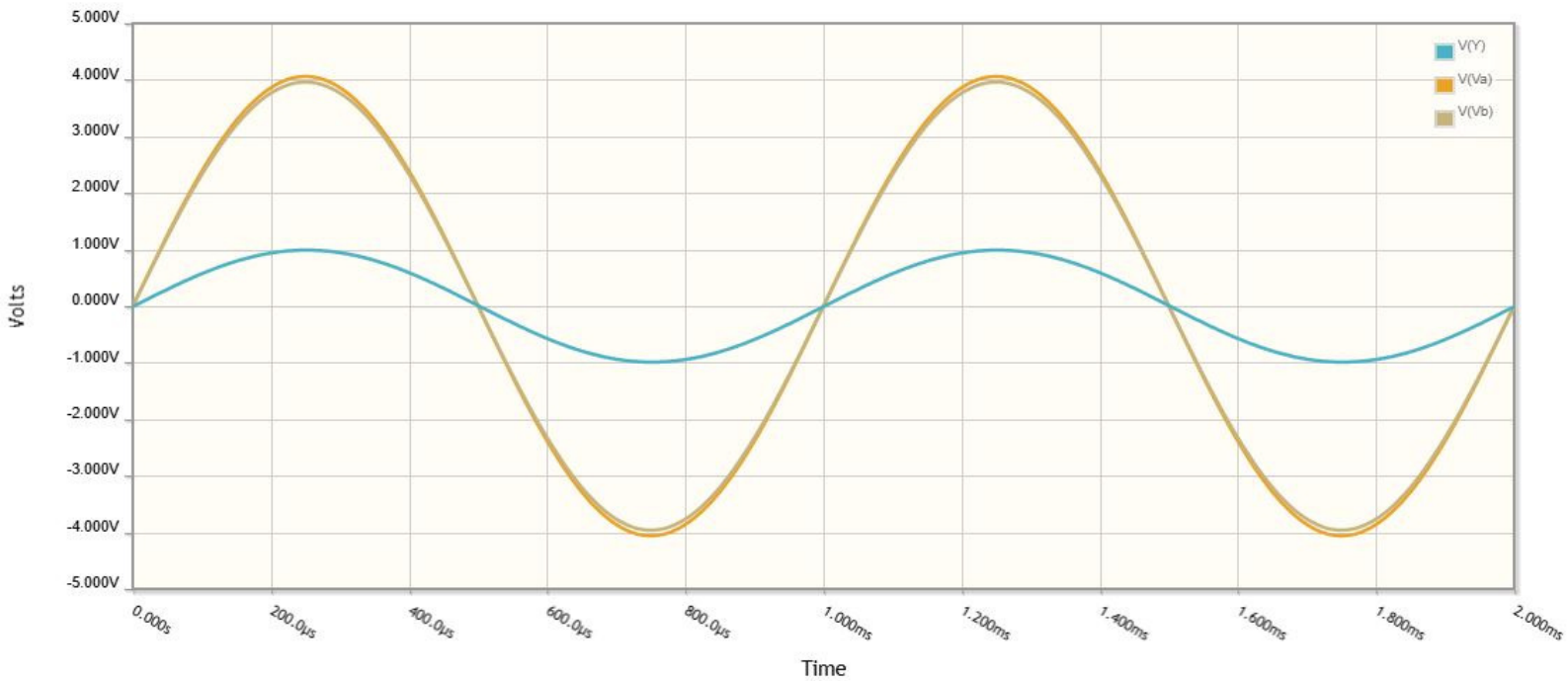

Analog Filters

DC Block

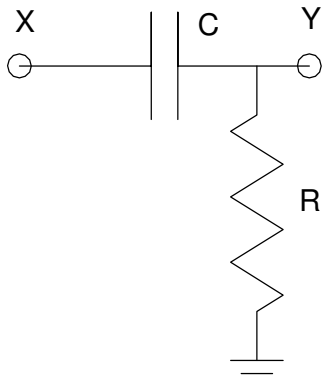

Low-Pass Filter: Real Poles

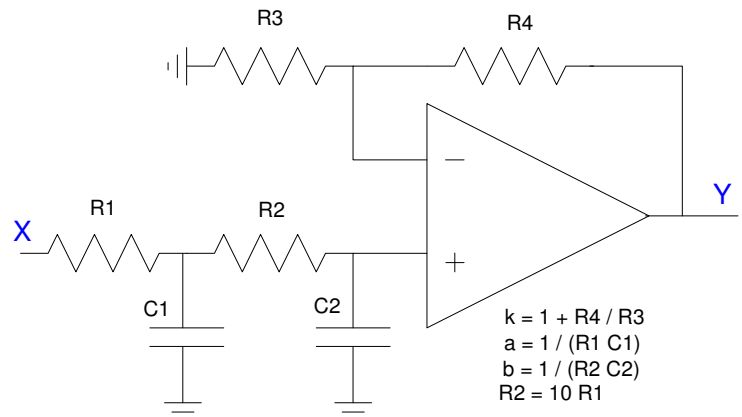

Low-Pass Filter: Single Real Pole

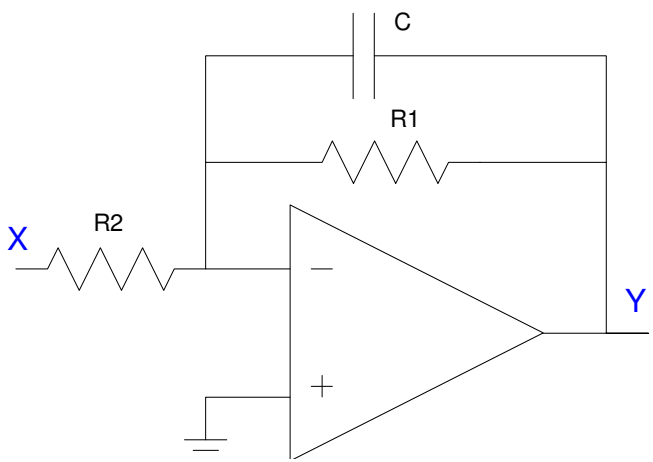

Low-Pass Filter: Complex Poles

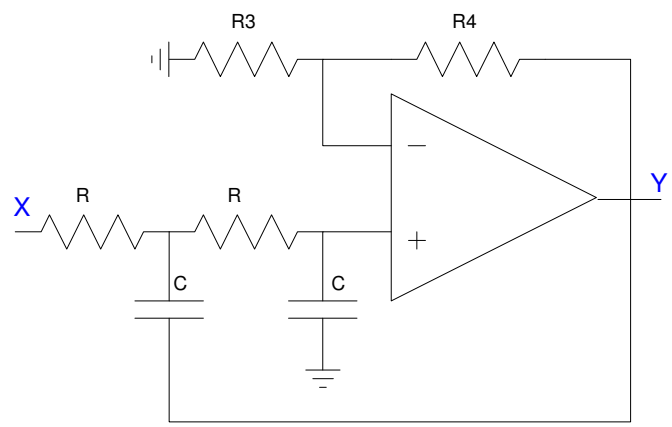

Example 1: $Y = \left(\frac{50}{(s+2)(s+3)}\right)X$

Use the circuit with two real poles. Let R1 = 100k, R2 = 1M

$$\left(\frac{1}{R_1 C_1}\right) = 2 \qquad \Rightarrow C_1 = 50nF$$

$$\left(\frac{1}{R_2 C_2}\right) = 3 \qquad \Rightarrow C_2 = 333nF$$

due to the lithium battery's voltage. Set the gain of the amplifier to 10

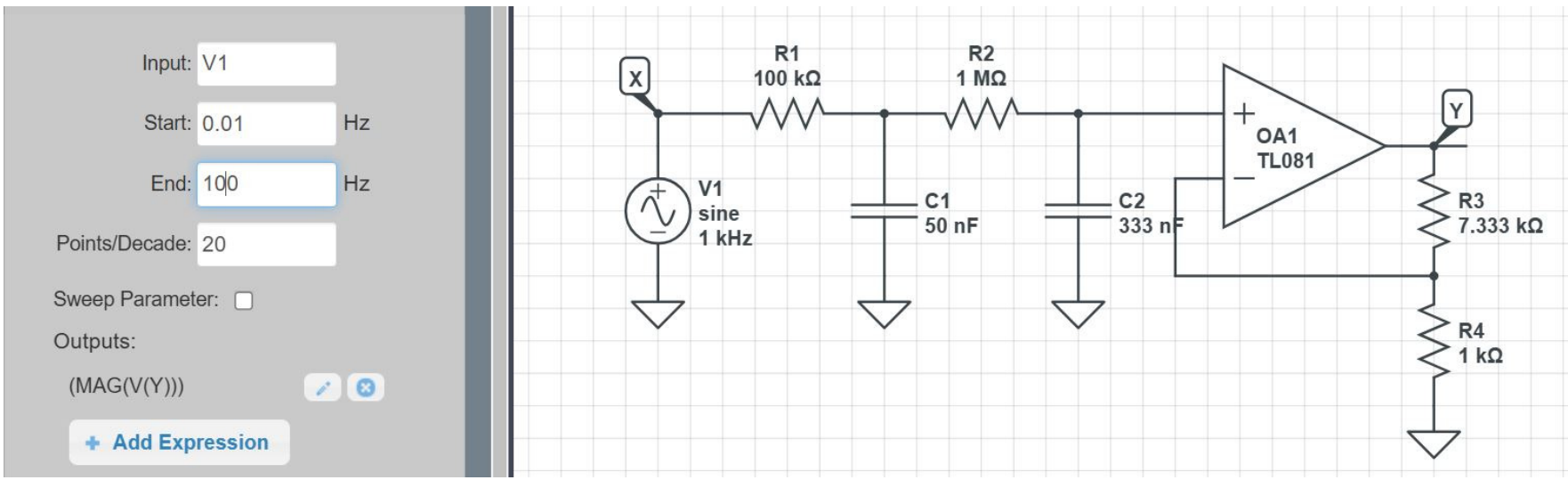

CircuitLab Simulation Results

Run a frequency sweep to see the characteristics of this filter

- 0.1 to 100 Hz
- 100 points per decade

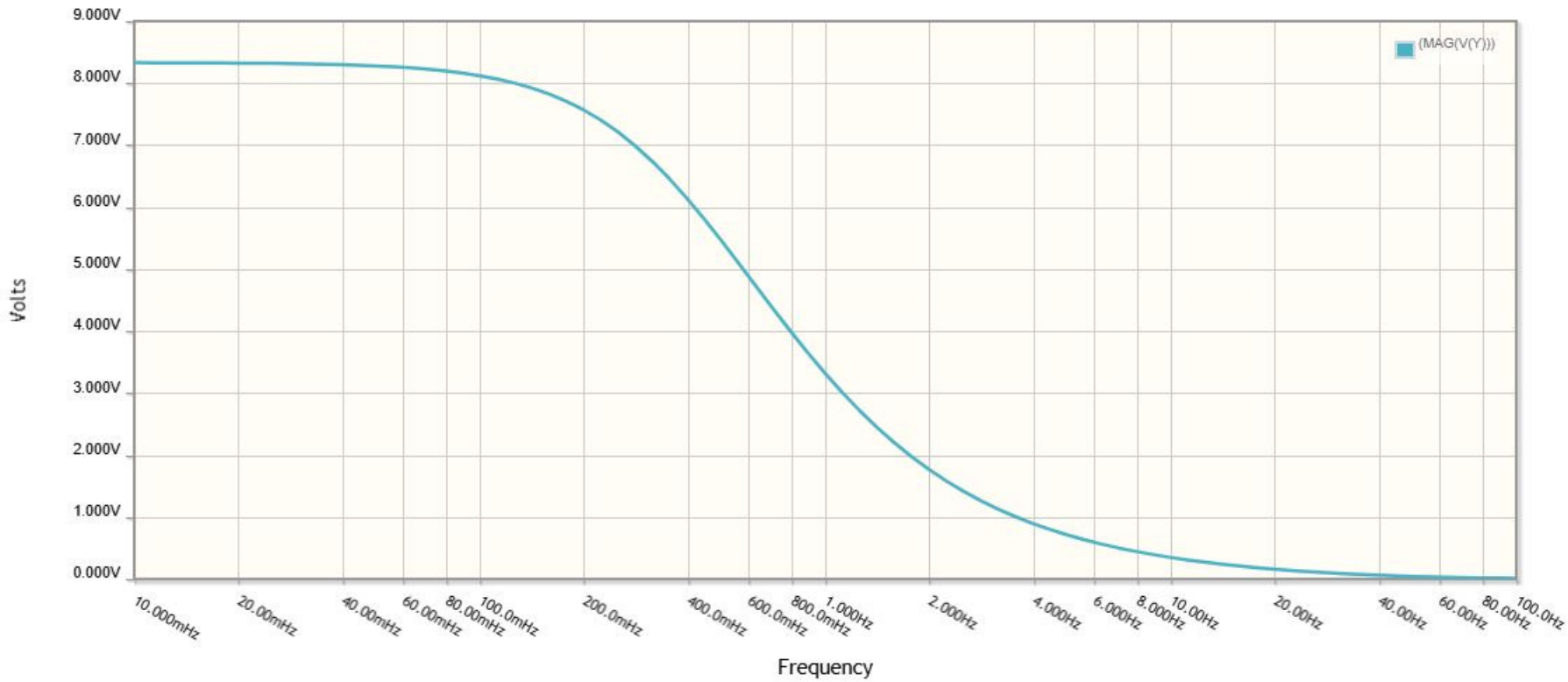

Example 2: $Y = \left(\frac{50}{s^2+2s+50}\right)X$

Since this circuit has complex poles, use the low-pass filter circuit with complex poles

$$s = -7.071\angle \pm 81.87^0$$

$$\frac{1}{RC} = 7.071 \qquad \Rightarrow C = 1.414\mu F$$

$$3 - k = 2\cos\theta \qquad \Rightarrow k = 1 + \frac{R_3}{R_4} = 2.717$$

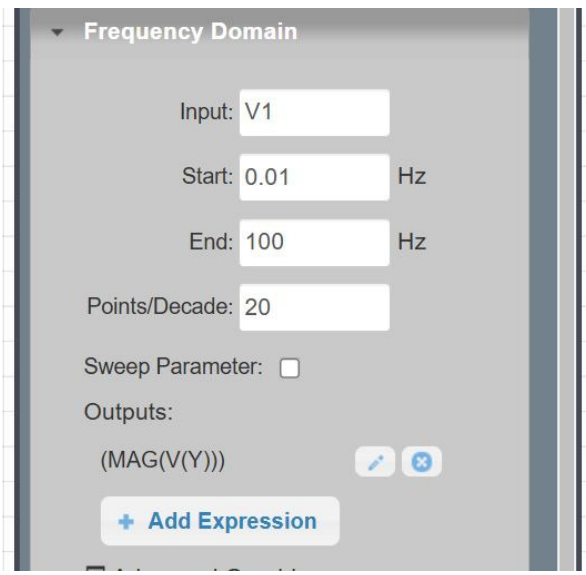

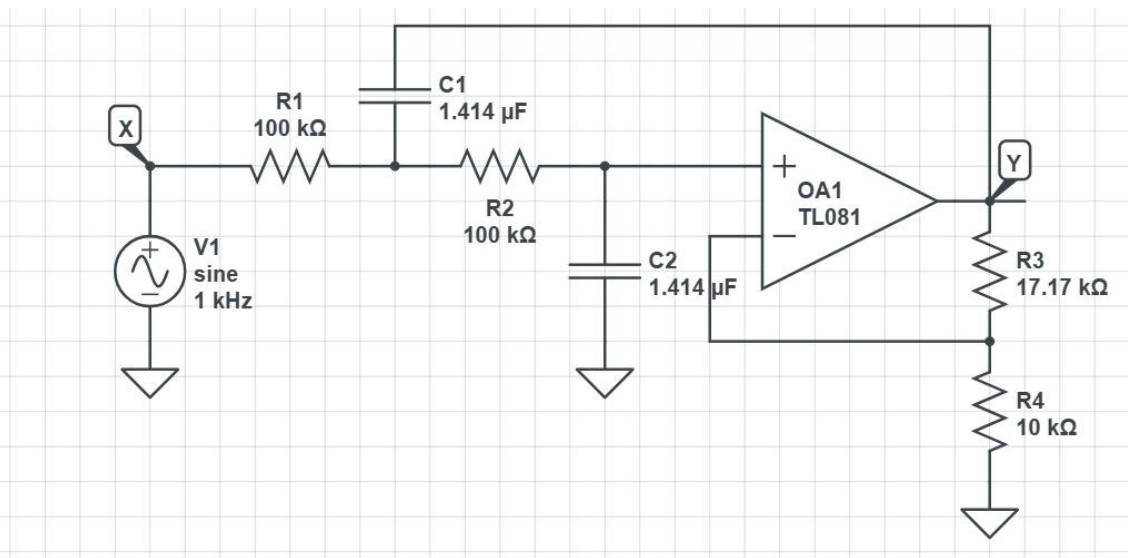

CircuitLab Simulation Results

Run a frequency sweep to see the characteristics of this filter

- 0.1 to 100 Hz
- 100 points per decade

The comples pole shows up as a resonance at 7 rad/sec

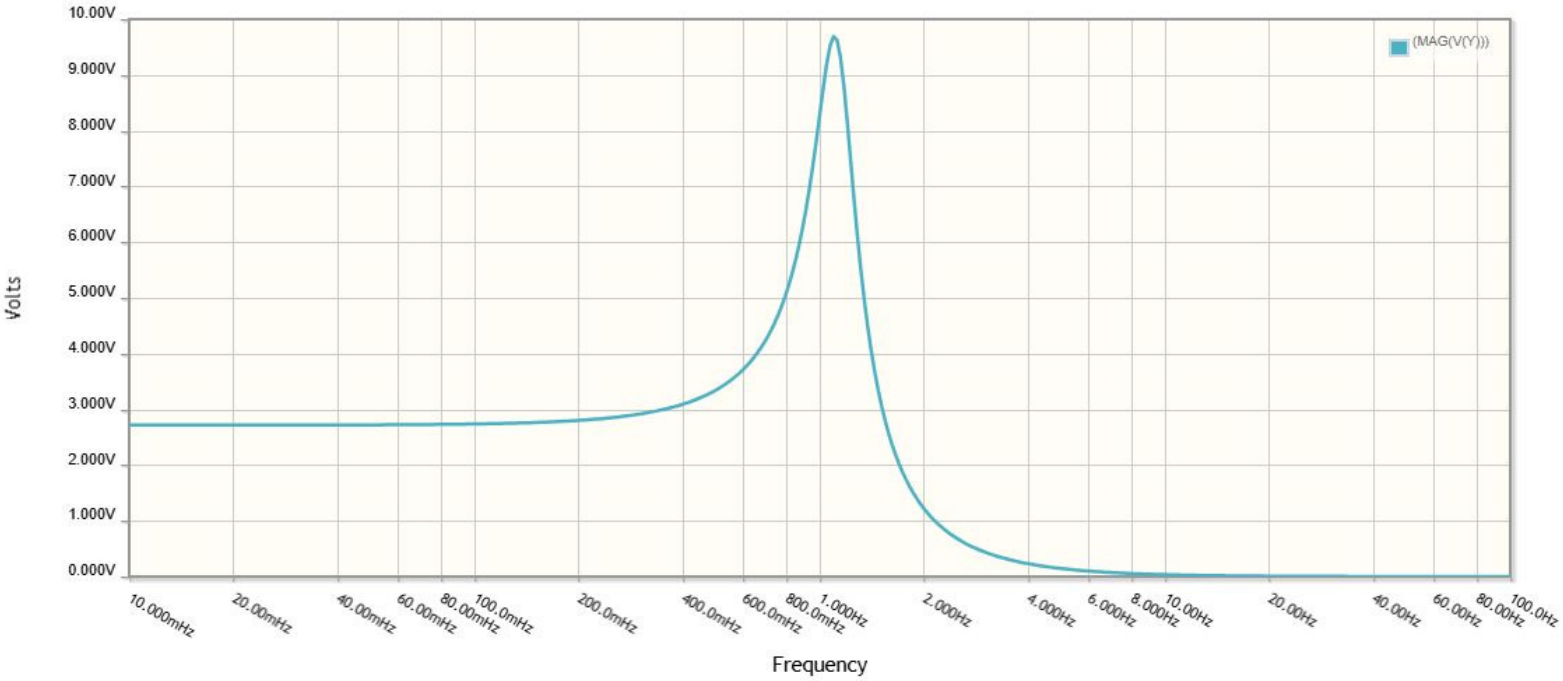

Homework #4

- Due week #8

Simulate the major sections of your circuit using CircuitLab

- DC Analysis
  - Currents and voltages
- Transient Response (if applicable)
  - Simulate waveforms if using a 555 timer
  - Check resulting frequency and duty cycle

Compare the simulation results vs. your calcultions

- Were your calculations correct?

Adjust your components to meets your requirements (if necessary)

Test Points: Include signals at test points

- +9V, +5V, ground
- Emitter, Collector for transistors
- Other points as needed to verify your circuit works correctly

Summary

Op-Amp circuits are kind of like legos

- Build up a circuit by piecing together op-amp circuits with different functions.
- One set of circuits are for digital outputs
- Another set is for analog outputs,
- Yet another set is for filters

CircuitLab lets you check your design

- Do the digital circuits switch at the correct voltages?
- Do amplifiers output a sine wave when the input is a sine wave?
  - With the correct amplitude?
- Do filters have the desired gain vs. frequency?

Note that the op-amp you use depends upon the type of circuit

- Digital circuits usually use an MCP602
- Analog circuits usually use an LM2904 or LM358