ECE 320 - Homework #7

DC to AC

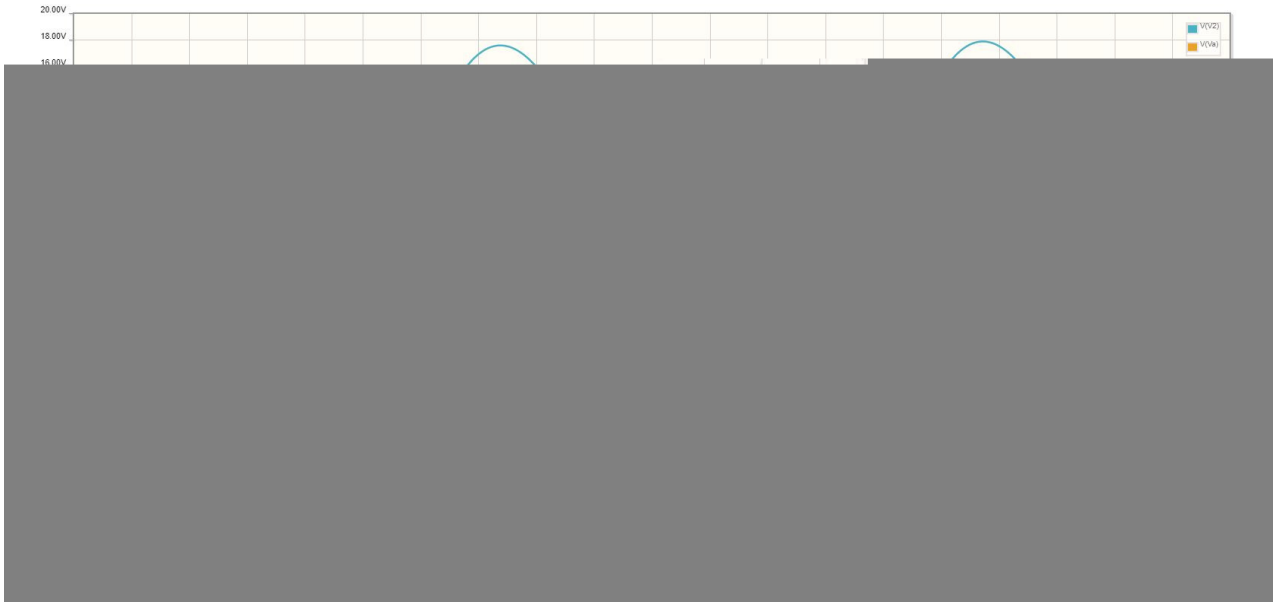
20.00V
18.00V
V(V2)
V(Va)

```
>> t = DATA(:,1);
>> V = DATA(:,2);
>> plot(t,V)
>> size(t)

ans =        2035           1

>> X = V(1605:2035);
>> C = zeros(20,1);
>> for n=1:20
   C(n) = 2*mean(X .* exp(-j*n*t));
   end
>> bar(abs(C))
>> C2 = abs(C) .^ 2;
>> C2(1) / sum(C2)

ans =    0.9971
```

99.71% of the energy in this signal is in the 1st harmonic

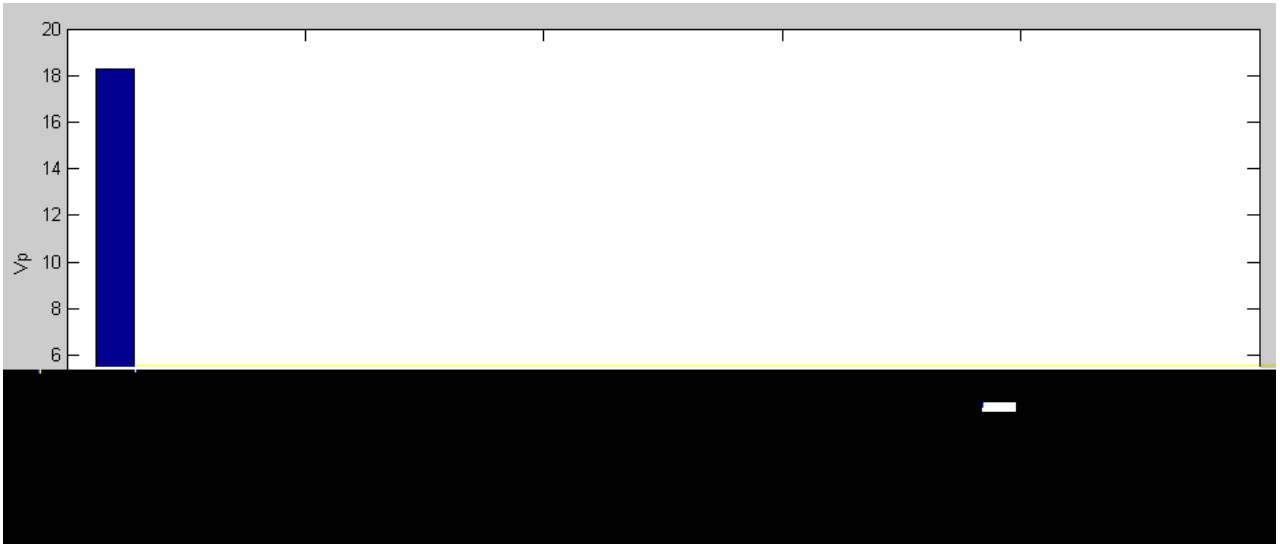

SCR

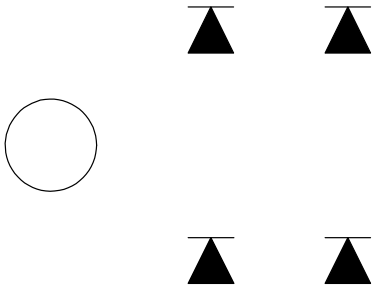

Just for fun, go out to the 20th harmonic (not as fun)

```
>> C = zeros(20,1);
>> for n=1:20
   C(n) = 2*mean(V1 .* exp(-j*2*n*t));
   end
>> bar(abs(C))
>> DC = mean(V1)
```

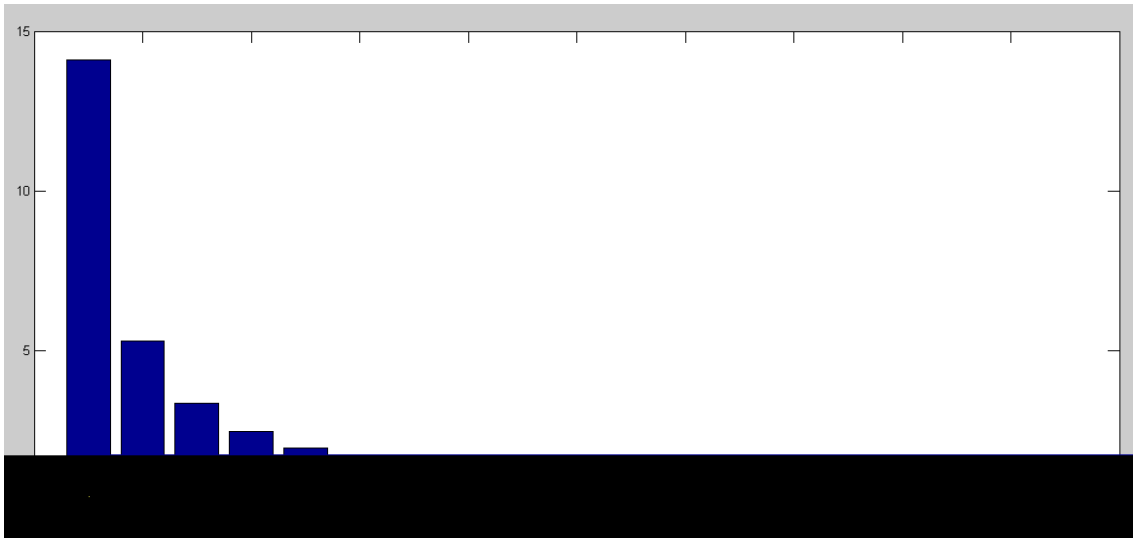

Magnitude of Each Harmonics (n = 1..20)

```
>> y = DC;
>> for n=1:20
y = y + real(C(n))*cos(2*n*t) - imag(C(n))*sin(2*n*t);
end
plot(t,V1,t,y)
```

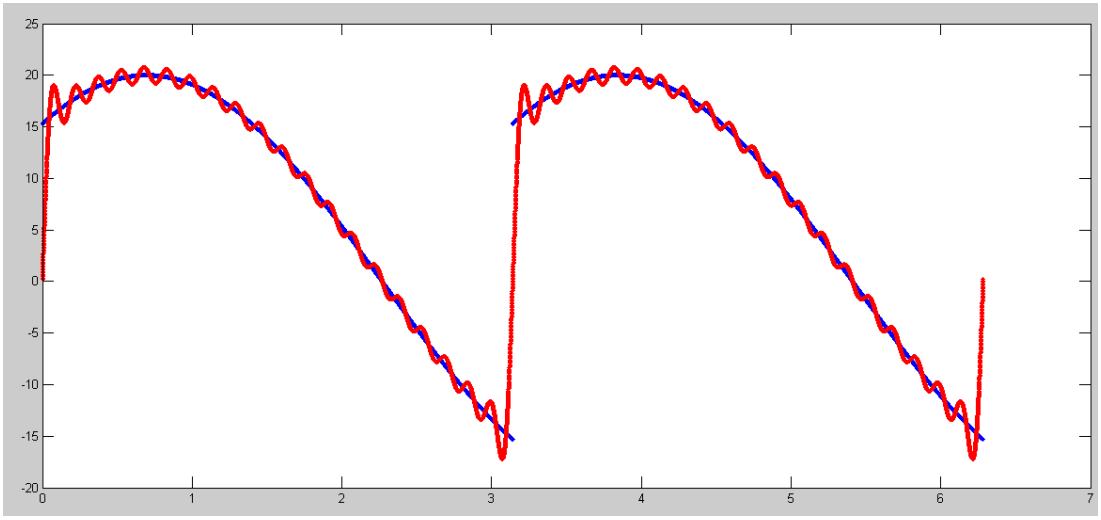

Fouier Series Approximation taken out to 20 terms

Boolean Logic:

7) Design a circuit to implement Y using NAND gate

NAND gates: Circle the ones

Y(A,B,C,D)	CD			
AB	00	01	11	10
00	1	0	0	x
01	1	0	x	1
11	1	x	1	0
10	0	1	x	0

$$Y = \overline{A}\overline{D} + AD + AB\overline{C}$$

Impliement this with an/or gates

Add double negatives to make these NAND gates

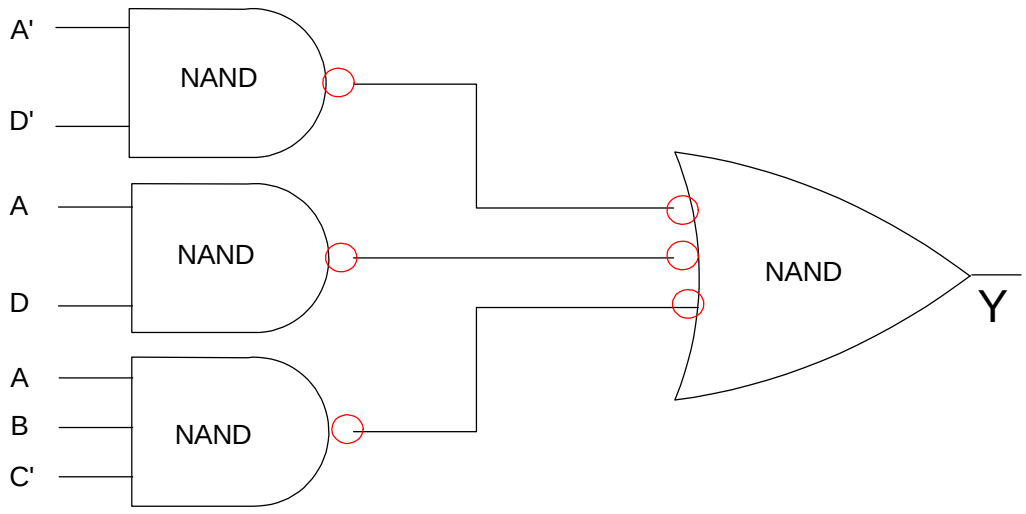

8) Design a circuit to implement Y using NOR gates

- Circle the zeros

Y(A,B,C,D)	CD			
AB	00	01	11	10
00	1	0	0	x
01	1	0	x	1
11	1	x	1	0
10	0	1	x	0

$$\overline{Y} = \overline{A}D + AC\overline{D} + A\overline{B}\overline{D}$$

Use DeMorgan's law

$$Y = \overline{A + \overline{D}} \quad \overline{\overline{A} + \overline{C} + D} \quad \overline{\overline{A} + B + D}$$
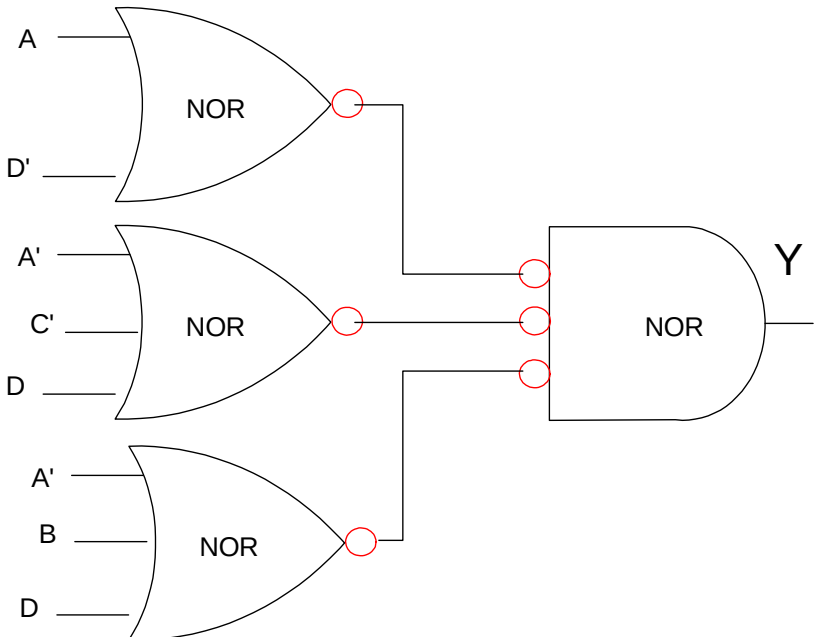
Implement using AND/OR gates. Add double negations to make these NOR gates