Analog Computers

ECE 211: Circuits I

Lecture #30

Please visit Bison Academy for corresponding
lecture notes, homework sets, and solutions

Analog Computers

- Electric circuit to implement a differential equation
- Allows you to duplicate the dynamics of an expensive system using an inexpensive circuit

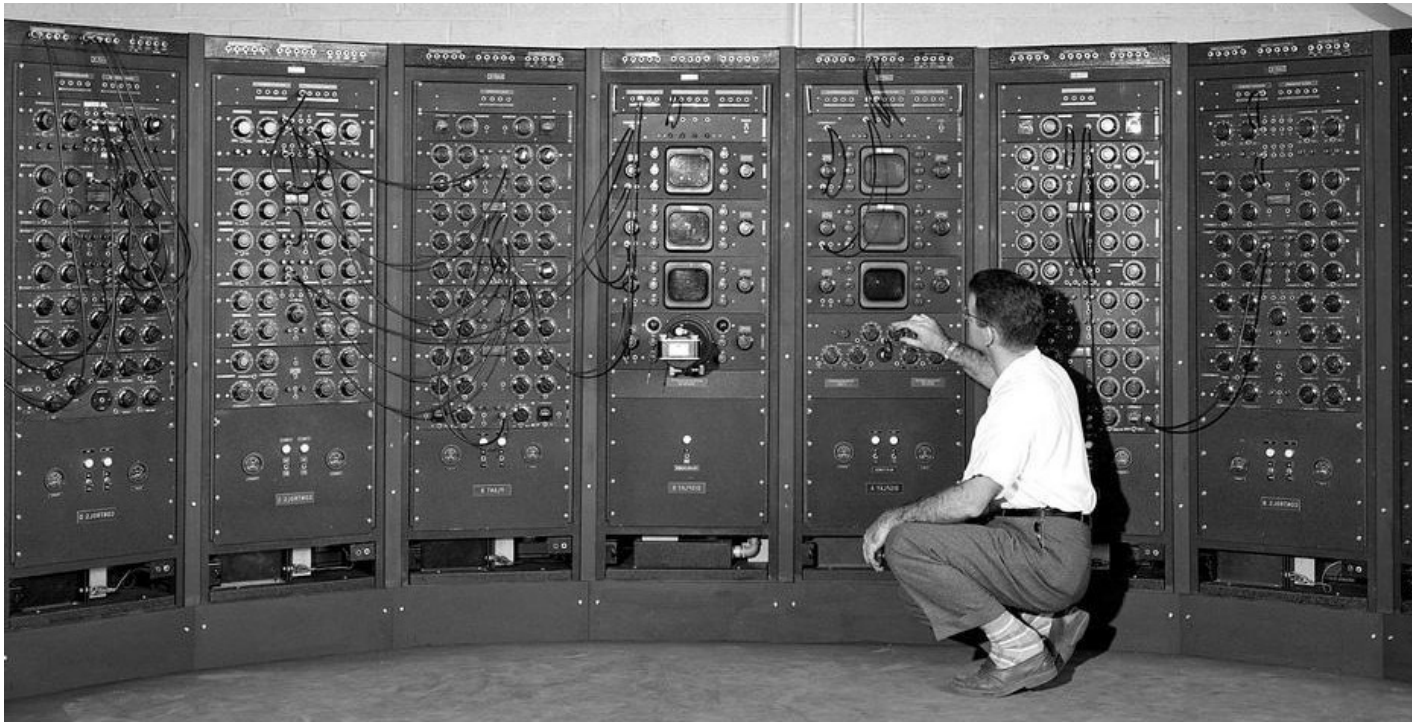

https://images.easytechjunkie.com/1949-electronic-analog-computer.jpg

Analog Computer Application

Jet Engine

https://www.airlineratings.com/did-you-know/how-is-a-jet-engine-tested/

- $10,000 / minute to test
- $4,000,000 if you go unstable

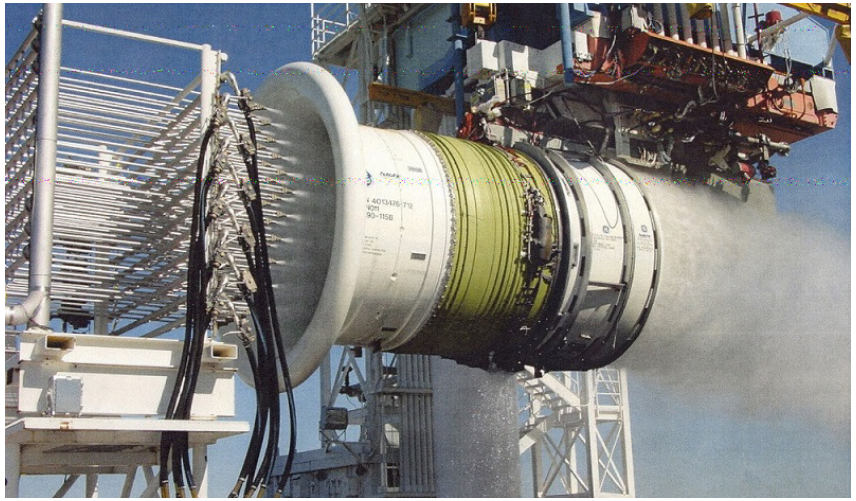

Analog Computer

http://www.analogmuseum.org/english/collection/eai/180/1_small.jpg

- 10 cents / kWh to operated
- Red LED turns on if you go unstable

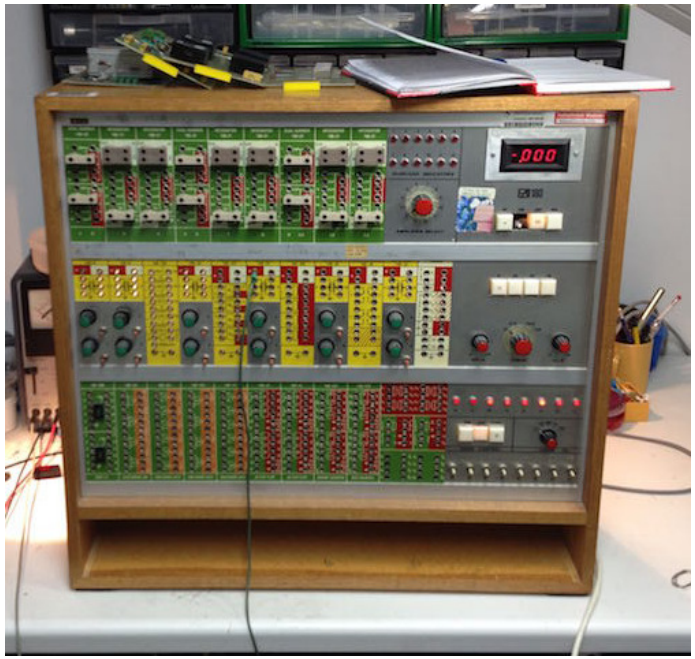

Automatic Controls

Almost everything is described by differential equations

- Rockets, missiles, airplanes
- Cars, bicycles, motorcycles

With feedback, you can

- Make unstable systems stable
- Make a system behave better

Usually, the feedback controller is a differential equation

- Flight controller for an airplane
- Learning how to ride a bicycle
- Cruise control on a car

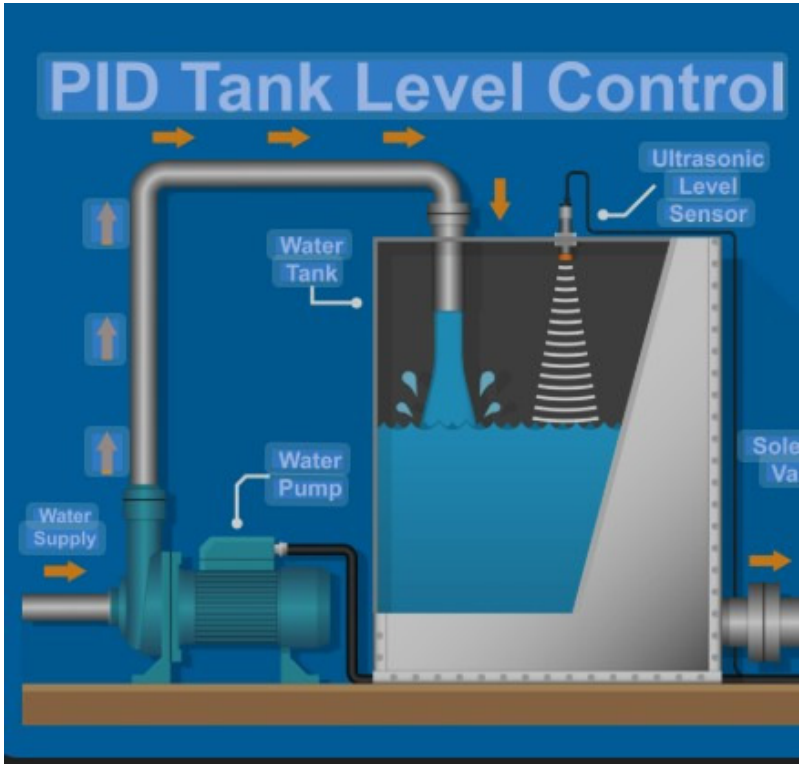

Analog computers are one way to implement a feedback control law

Building Blocks of Analog Computers

Integrator

$$y = \frac{-1}{RC}\int x(t)dt$$

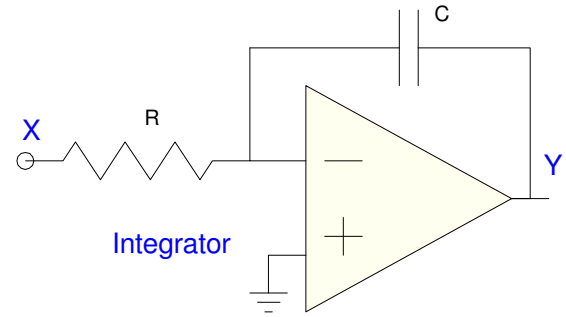

Amplifier

$$Y = -\left(\frac{R_1}{R_2}\right)X$$

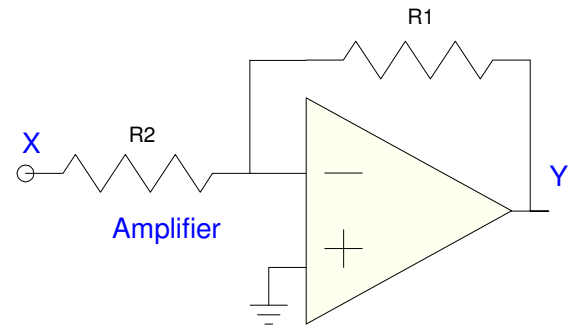

Summing Amplifier

$$Y = -\left(\frac{R_1}{R_a}\right)A - \left(\frac{R_1}{R_b}\right)B$$

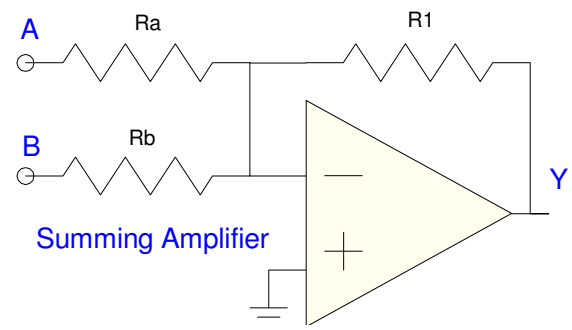

Analog Computers

Analog computers solve differential equations

Example: Assume y(t) and u(t) are related by a differential equation:

$$y''' + a_2 y'' + a_1 y' + a_0 y = b_2 u'' + b_1 u' + b_0 u$$

Given u(t), determine y(t)

Step 1: Create a dummy variable, x(t)

Rewrite

$$y''' + a_2 y'' + a_1 y' + a_0 y = b_2 u'' + b_1 u' + b_0 u$$

as

$$x''' + a_2 x'' + a_1 x' + a_0 x = u$$

$$y = b_2 x'' + b_1 x' + b_0 x$$

Integrate x''' three times

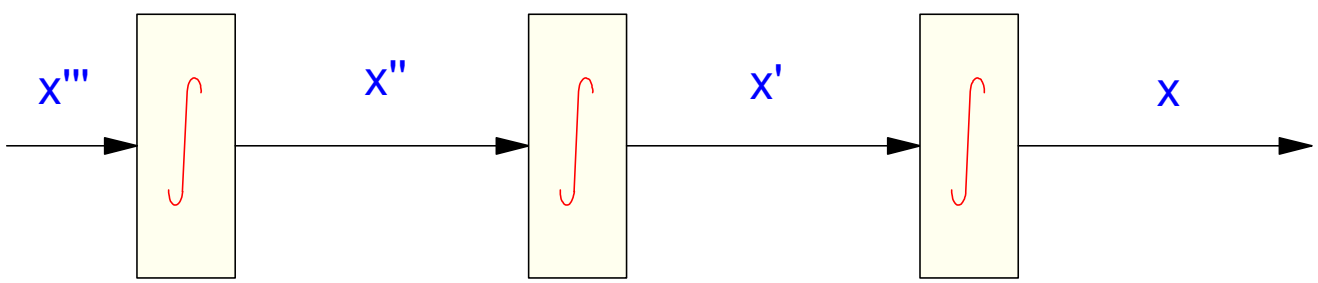

Step 2: Generate x''' using amplifiers and summing junctions

$$x''' = -a_2 x'' - a_1 x' - a_0 x + u$$

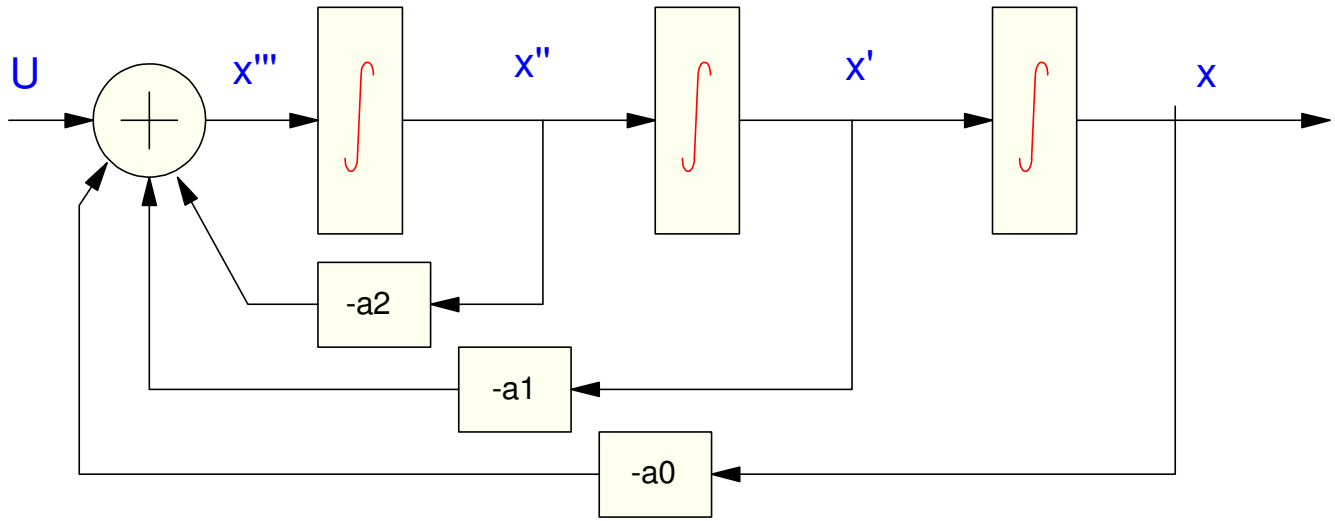

Step 3: Generate y from x and its derivatives

$$x''' + a_2 x'' + a_1 x' + a_0 x = u$$

$$y = b_2 x'' + b_1 x' + b_0 x$$

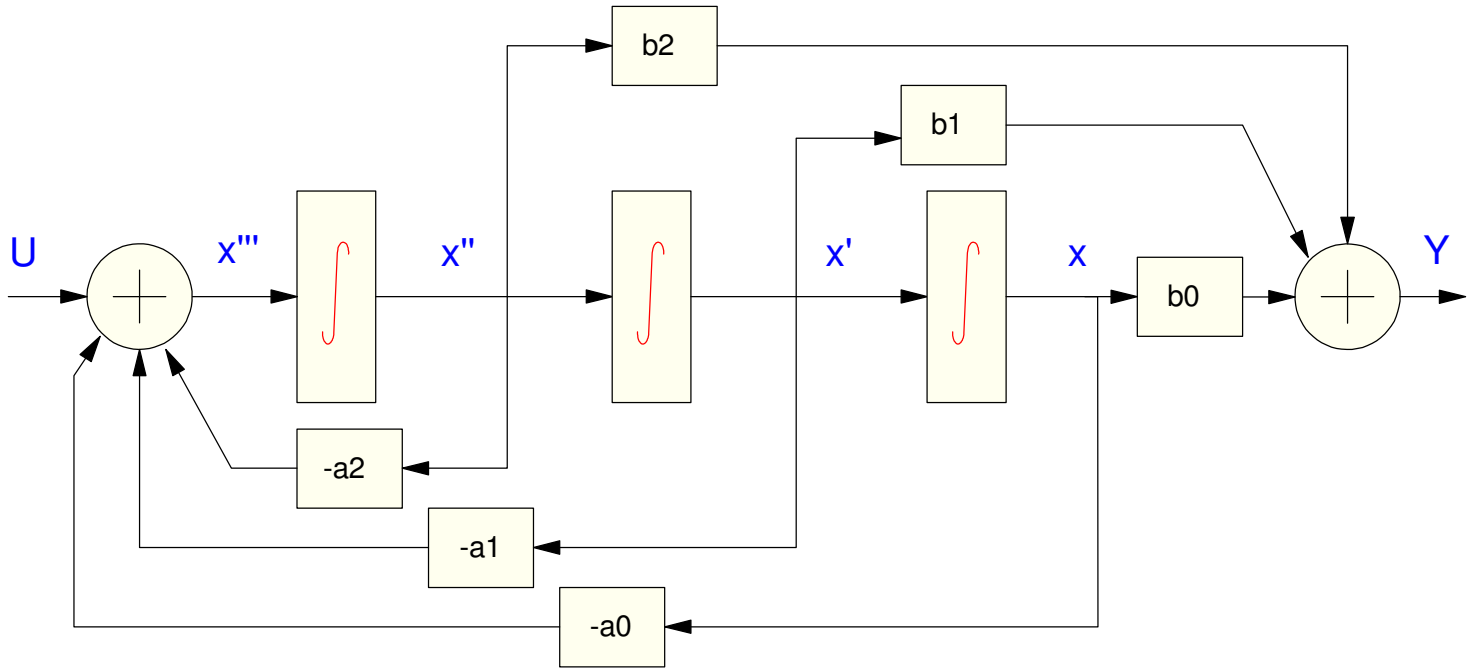

Step 4: Replace elements with analog computer notation

Summing Amplifier

- Y = aA + bB - cC

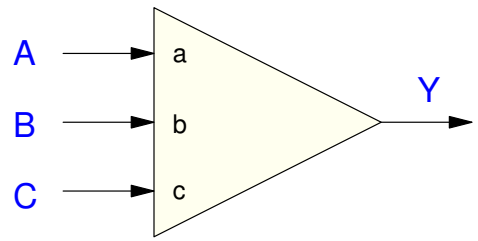

Summing Amplifier

Summing Integrator

- $Y = a\int A(t)dt + b\int B(t)dt + c\int C(t)dt$

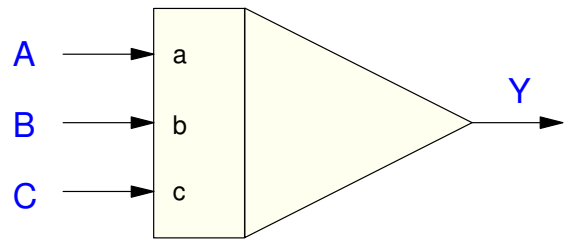

Summing Integrator

Step 4 (cont'd)

$$y''' + a_2 y'' + a_1 y' + a_0 y = b_2 u'' + b_1 u' + b_0 u$$

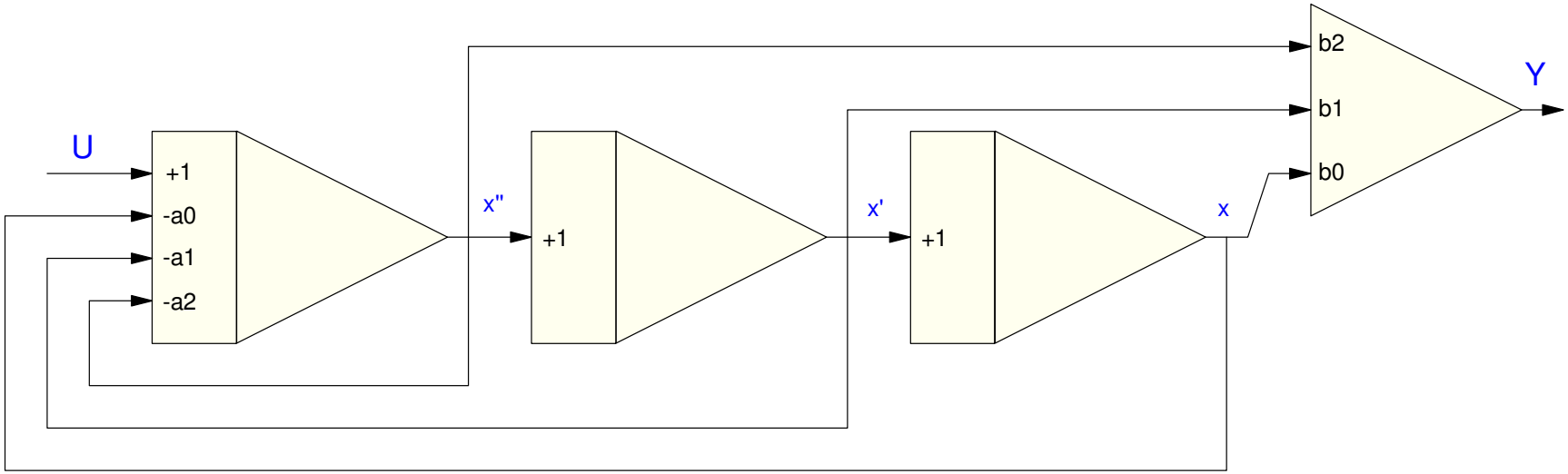

Step 5: Adjust the gains

- Make all gains negative
  - Circuit used has a negative gain
- Add an inverter (gain = -1) if needed
- Keep the loop gains unchanged & gain from U to Y unchanged

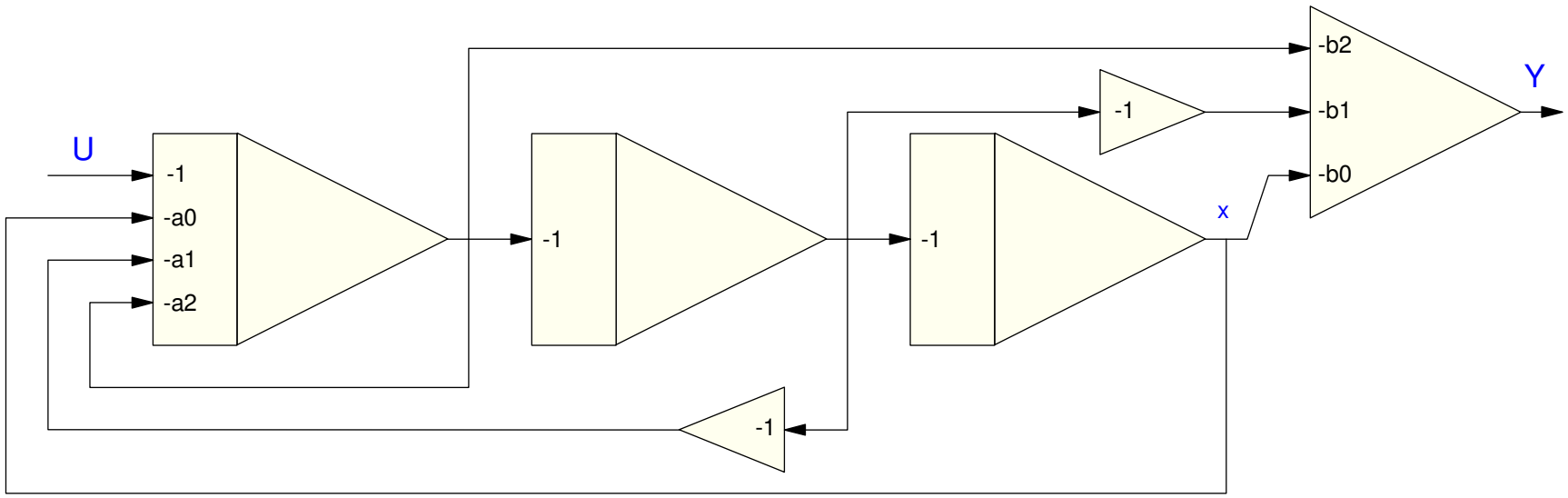

Step 6: Replace each amplifier with its op-amp circuit

- units MΩ and uF

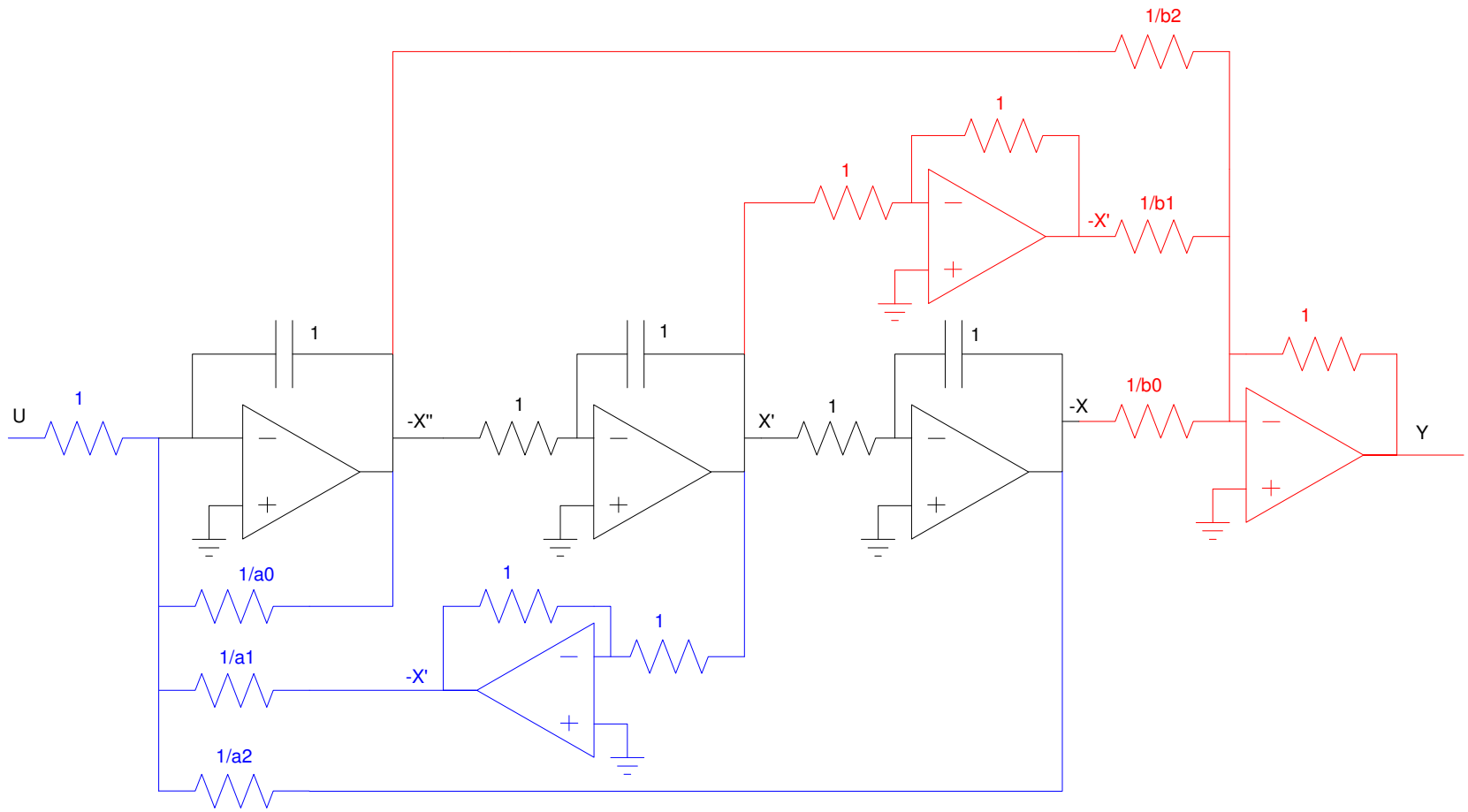

Practice Problem

Design an analog computer to solve

$$y'' + 2y' + 10y = 5x$$

Sidelights

The answer isn't unique

- There are several ways to express a differential equation
- There are several ways to implement a differential equation in hardware

It tends to work best if you cascade 1st & 2nd-order systems

- Simple systems work better than complex systems

Sidelight

This technique works well if the poles are close to 1.000

If the poles are not close to 1,

- Scale the poles so that they are close to 1.000
- Design the analog computer using the previous techniques
- Scale the circuit by making C larger (slower) or smaller (faster) to return to the original pole locations.

Modern Analog Computers

Anything you can do in hardware you can do in software

Analog computers are now implemented in software

- LabView, Simulink, CircuitLab

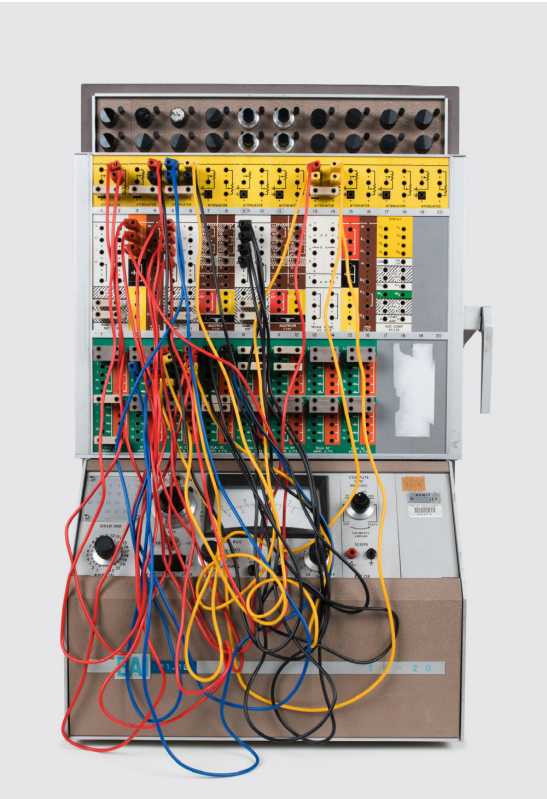

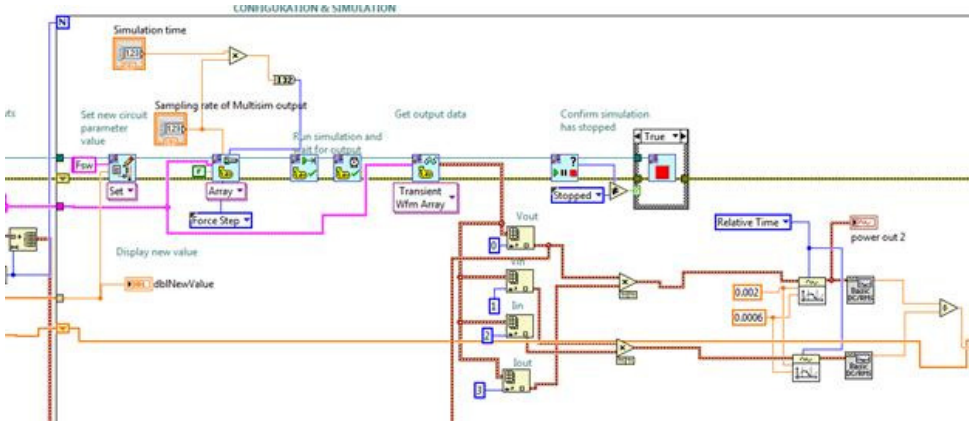

Summary:

Analog computers are just op-amp circuits

- They allow you to implement any differential equation

The heart is the inverting integrating circuit

- Nth-order differential equation requires N integrators

Plus inverting amplifiers and summing junctions

Somewhat dated:

- You can do the same thing with a microcontroller
- Analog computers are tools: for some applications, they work fine. For others, a microcontroller is easier to use.