Phasors

ECE 211 Circuits I

Lecture #23

Please visit Bison Academy for corresponding
lecture notes, homework sets, and solutions

Topics

- Phasors
- Representing voltages using phasors
- Representing RLC using phasors
- AC circuit analysis using phasors
- HP42 Calculator

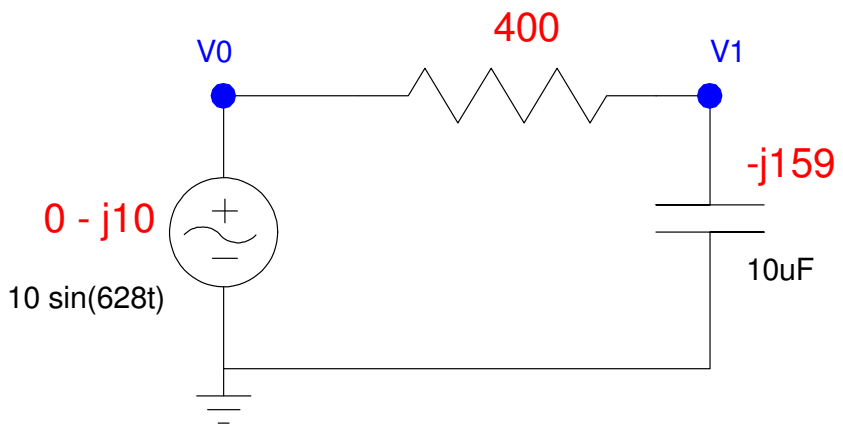

Introduction

DC Analysis: First part of Circuits I

With DC circuits:

- Voltages can be expressed by a real number
- Currents can be expressed with real numbers, and
- Resistance's can be expressed with real numbers.

AC Analysis: End of Circuits I, all of Circuits II

- Voltages have two terms: sine & cosine
- Impedances include Resistors, Inductors, & Capacitors

Complex numbers are needed for AC analysis

Representation of Complex Numbers:

Rectangular Form:

$$P = a + jb$$

Polar Form

$$P = r\angle\theta$$

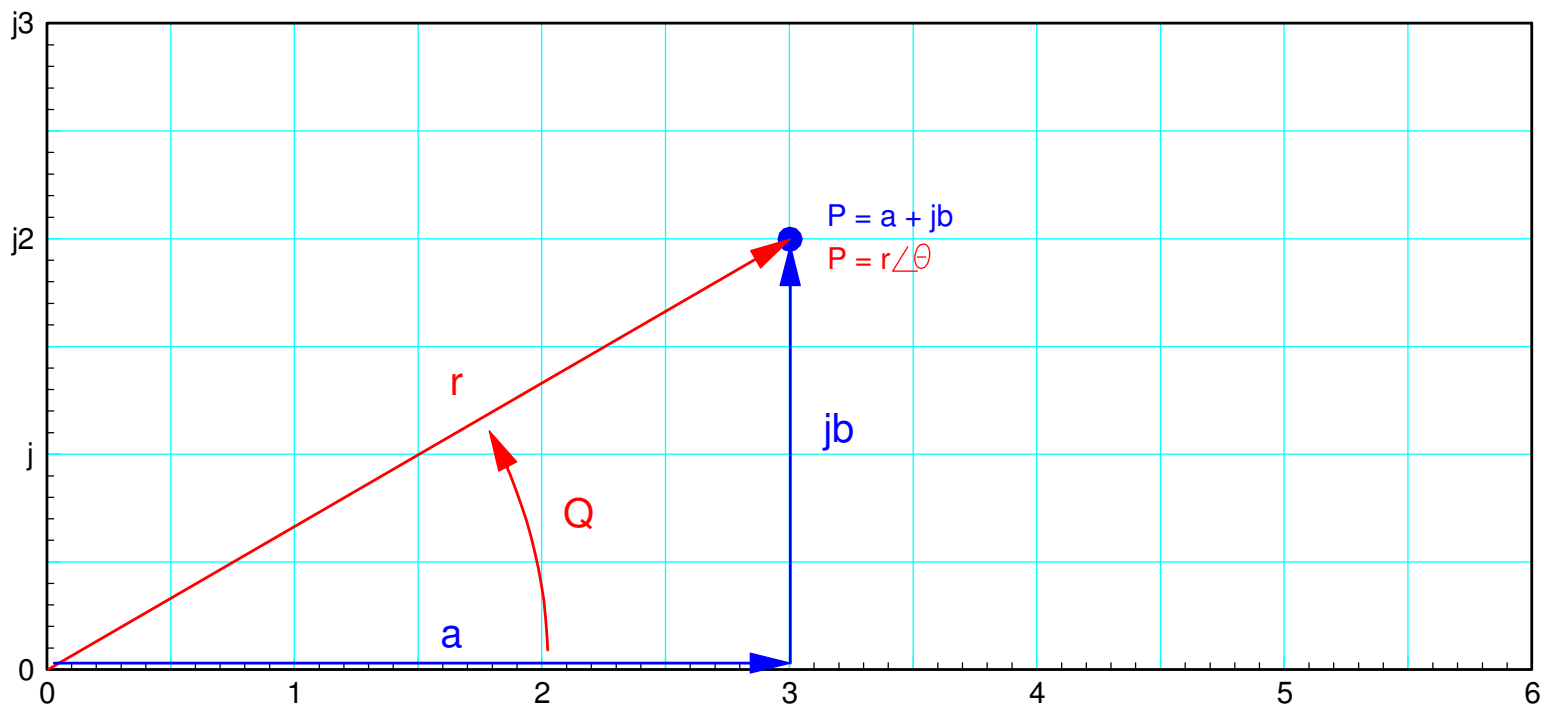

Phasor Representation of Voltages

Euler's identity states

$$e^{j\omega t} = \cos(\omega t) + j\sin(\omega t)$$

If you assume all functions are of the form of $e^{j\omega t}$, then

$$\cos(\omega t) = real(e^{j\omega t})$$

Likewise, the phasor (complex-number) representation for cosine is one

$$1 \leftrightarrow \cos(\omega t)$$

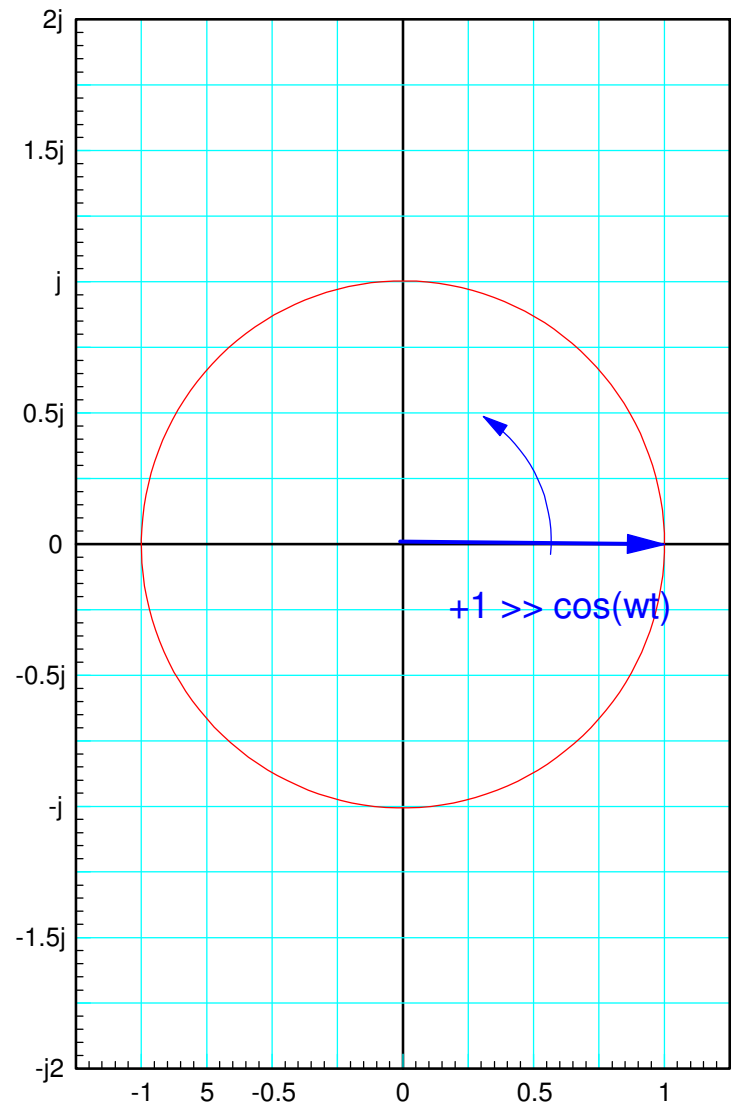

If you multiply by (a + jb)

$$(a+jb)e^{j\omega t} = (a+jb)(\cos(\omega t) + j\sin(\omega t))$$
$$= (a\cos(\omega t) - b\sin(\omega t)) + j(\cdots)$$

and take the real part you get the phasor representation for a generalized sine wave

$$a + jb \leftrightarrow a\cos(\omega t) - b\sin(\omega t)$$

You can also represent voltages in polar form:

$$r\angle\theta \leftrightarrow r\cos(\omega t + \theta)$$

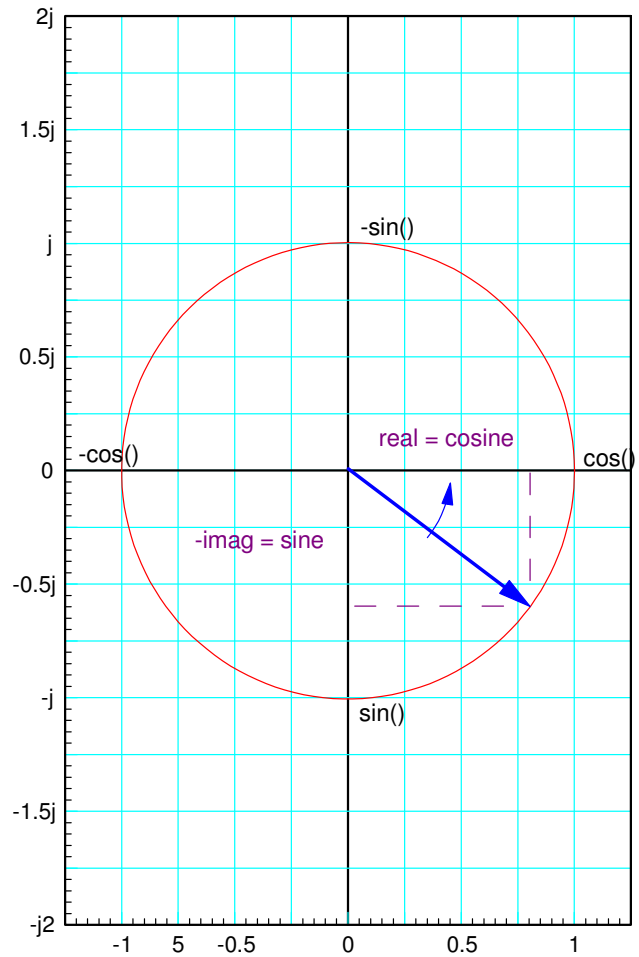

Example: Determine x(t) for the following waveform:

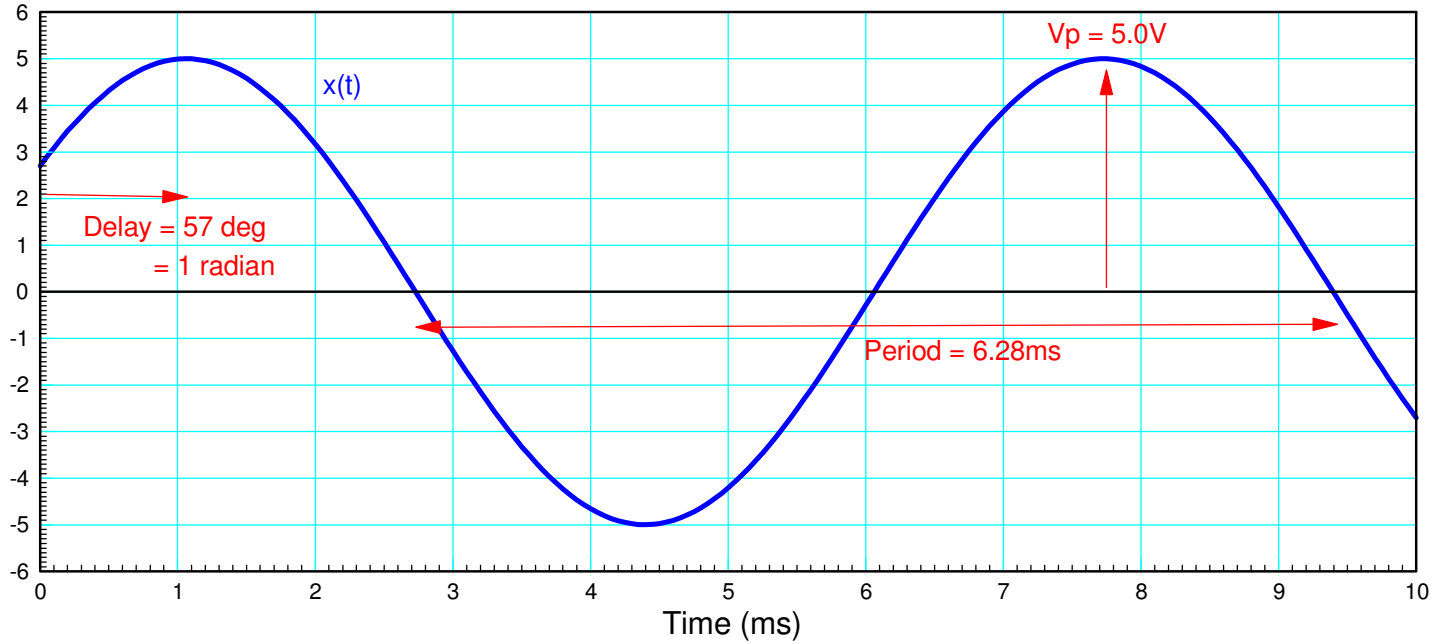

Typical Sinusoid: Determine x(t)

The frequency comes from the period

$$T = 6.28ms$$

$$f = \frac{1}{T} = 159.2Hz = 159.2\frac{\text{cycles}}{\text{second}}$$

$$\omega = 2\pi f = 1000\frac{\text{rad}}{\text{sec}}$$

$$\theta = -\left(\frac{\text{1ms delay}}{\text{6.28ms period}}\right)2\pi = -1.0\,\text{radian} = \text{-}57.3^0$$

meaning (in polar form)

$$x(t) = 5\cos(1000t - 57.3^0) = 5\angle -57.3^0$$

In rectangular form

$$X = 2.70 - j4.21$$

$$x(t) = 2.70\cos(1000t) + 4.21\sin(1000t)$$

Phasor Representation for Impedance's

When dealing with AC signals, resistors, capacitors, and inductors can all be used. Phasor analysis converts each of these to a complex impedance.

Resistors: The VI relationship for a resistor is

$$V = IR$$

The phasor impedance of a resistor is R.

$$R \rightarrow R$$

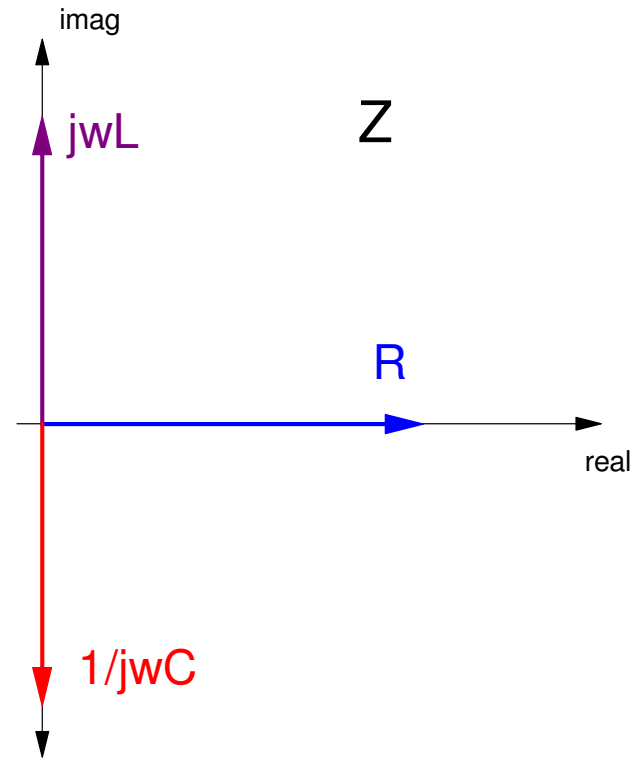

Inductors: The VI relationship for an inductor is

$$V = L\frac{dI}{dt}$$

Assuming all signals are in the form of $e^{j\omega t}$, this means

$$V = L\frac{d}{dt}(e^{j\omega t}) = j\omega L\, e^{j\omega t} = j\omega L \cdot I$$

The impedance of an inductor is $j\omega L$

$$L \rightarrow j\omega L$$

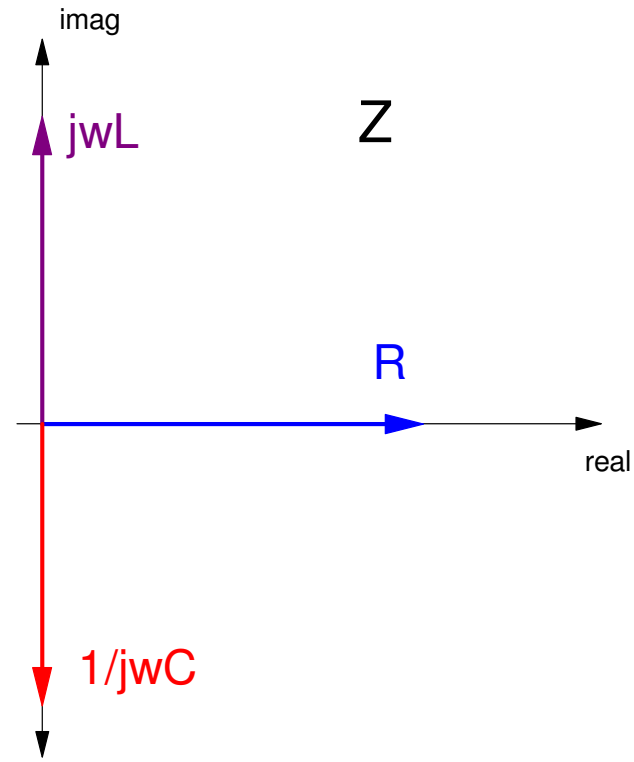

Capacitors: The VI relationship for a capacitor is

$$V = \frac{1}{C}\int I\,dt$$

Assuming all signals are in the form of $e^{j\omega t}$,
this means

$$V = \frac{1}{C}\int (e^{j\omega t});dt = \left(\frac{1}{j\omega C}\right)e^{j\omega t} = \left(\frac{1}{j\omega C}\right)I$$

The impedance of a capacitor is $\left(\frac{1}{j\omega C}\right)$

$$C \rightarrow \frac{1}{j\omega C}$$

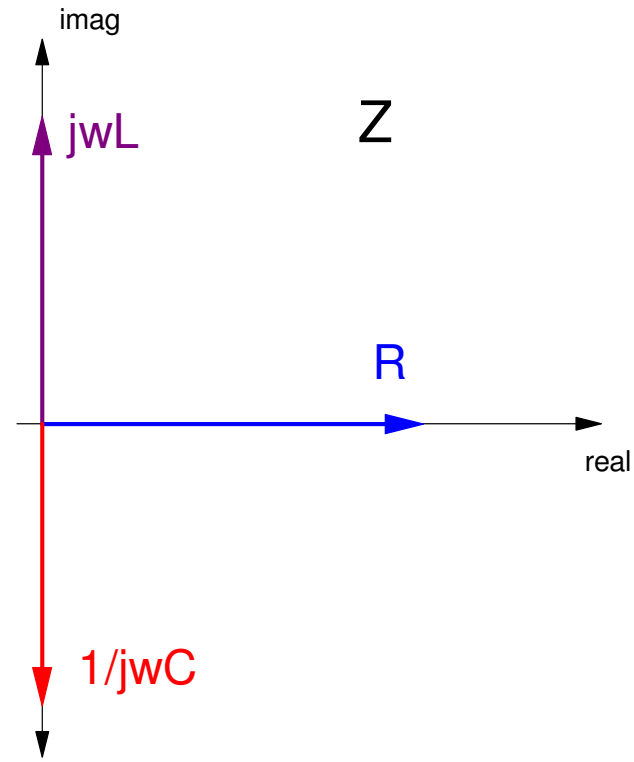

ELI the ICE Man

- For inductors (L), voltage leads current (ELI)
- For capacitors (C), current leads voltage (ICE).

ELI: If $\omega L = 1$ then

$$L \rightarrow j\omega L = j = 1\angle 90^0$$

$$V = I \cdot j\omega L = I \cdot 1\angle 90^0$$

Voltage leads current (ELI) for inductors

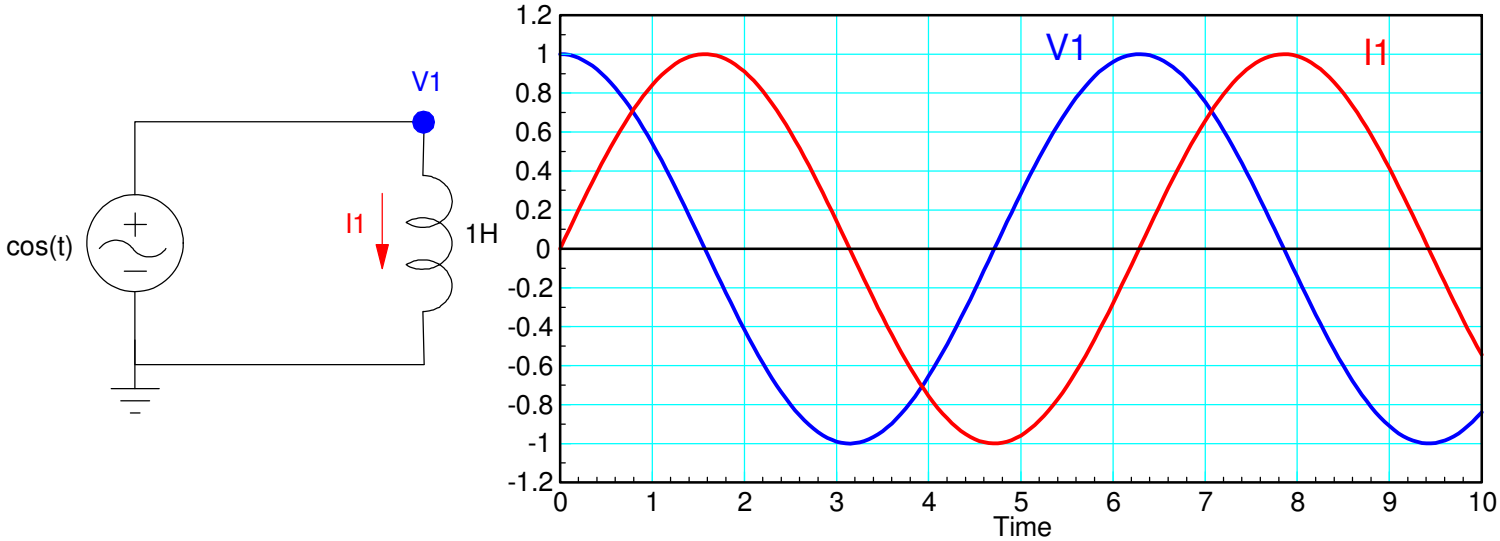

ICE: For capacitors, if $\omega C = 1$, then

$$\frac{1}{j\omega C} = -j = 1\angle -90^0$$

$$V = I \cdot 1\angle -90^0$$

Voltage lags current by 90 degrees for capacitors (ICE)

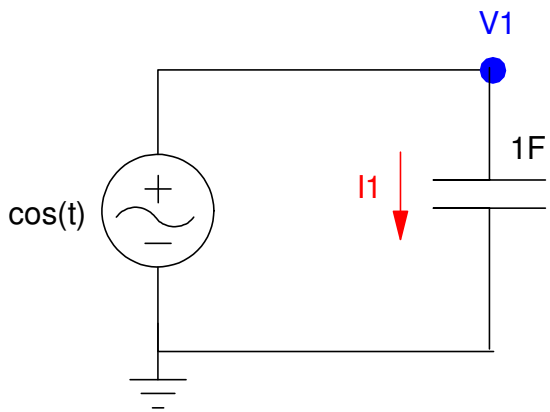

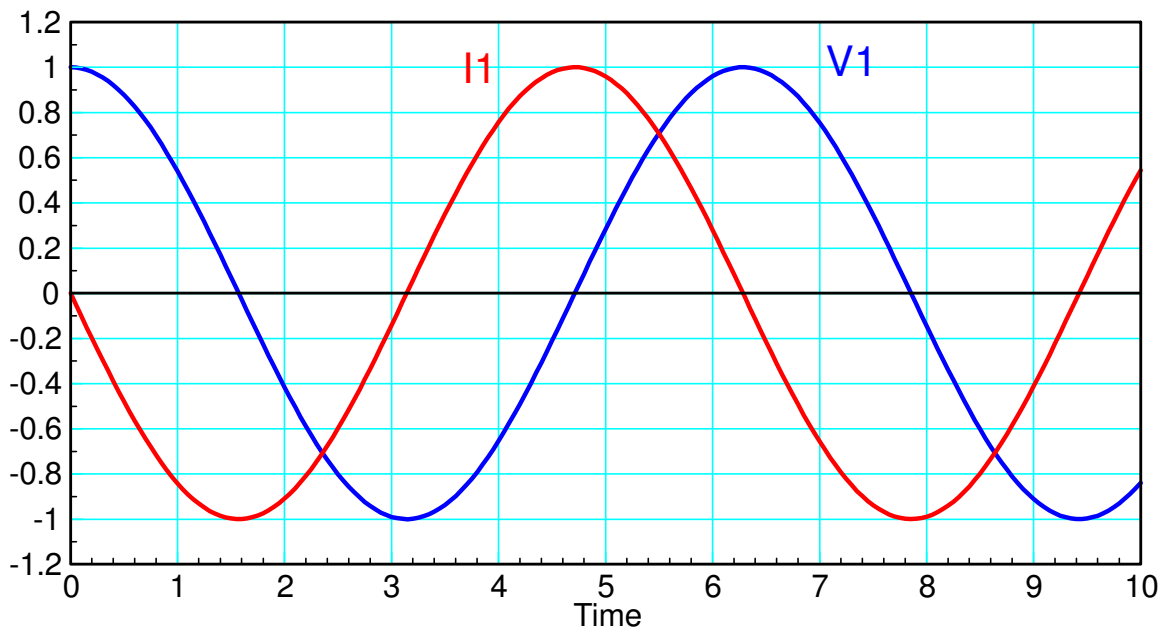

Phasor Summary

Component	Phasor Representation
V = a cos(wt) - b sin(wt)	a + jb
R	R
L	jwL
C	1 / jwC

Simplification of RLC circuits

Resistor Circuits:

- Resistors in series add
- Resistors in parallel add as $\left(\frac{1}{R_1} + \frac{1}{R_2} + ..\right)^{-1}$

RLC Circuits:

- Same as resistor circuits
- Except you're dealing with complex numbers.

Example: Determine the impedance Zab.

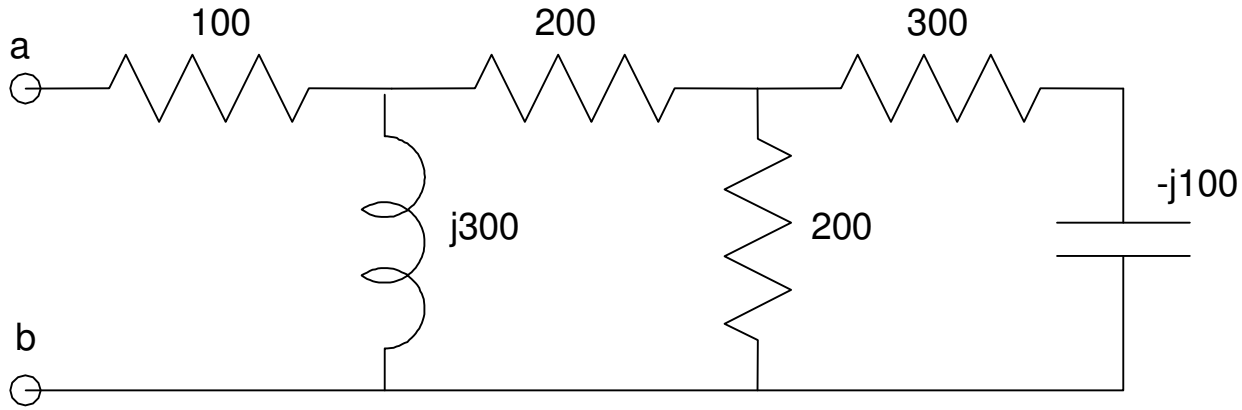

Solution:

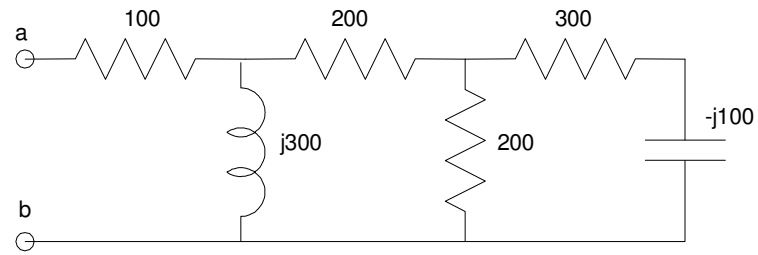

-j100 and +300 are in series

-j100 + 300 = 300 - j100

This is in parallel with 200

$$(200)||(300-j100) = \left(\frac{1}{200}+\frac{1}{300-j100}\right)^{-1} = 123.07-j15.38$$

Which is in series with 200

$$(200)+(123.07-j15.38) = 323.07-j15.38$$

Which is in parallel with +j300

$$(j300)||(323.08-j15.38) = 156.85+j161.83$$

which is in series with 100

$$(100)+(156.85+j161.83) = 256.85+j161.83$$

Answer:

$$Z_{ab} = 256.85+j161.83$$

Solving in Matlab

```
>> Z2 = 1 / (1/200 + 1/(300 - j*100) )

Z2 =  1.2308e+002 -1.5385e+001i

>> Z1 = 1 / (1/(j*300) + 1/(200 + Z2) )

Z1 =  1.5685e+002 +1.6183e+002i

>> Zab = 100 + Z1

Zab =  2.5685e+002 +1.6183e+002i
```

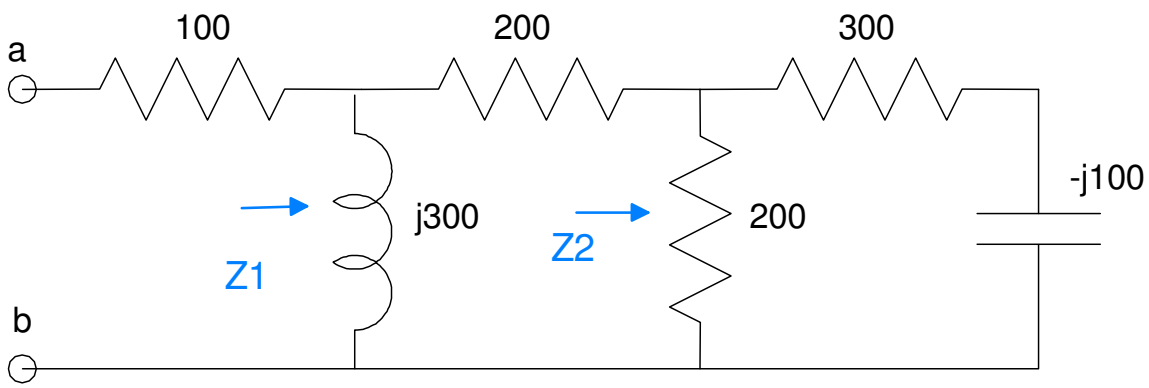

Solving with an HP42

```
300
enter
-100
compelx
1/X
200
1/X
+
1/X     Z2 = 123.0769
- j15.3846
200
+
1/X
0
enter
300
complex
1/X
+
1/X     Z1 = 156.8465 + j161.8257
100
+       Zab = 256.8465 + j161.8257
```

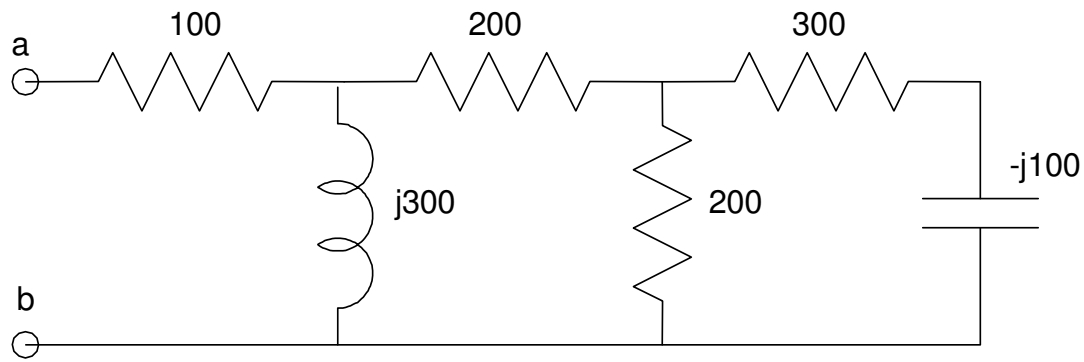

Solving in CircuitLab

Zab tells you that current and voltage are related by

$$V = I \cdot Z_{ab}$$

$$V = I \cdot (256.8456 + j161.8257)$$

$$V = I \cdot (303.54 \angle 32.21^{0})$$

Translation:

- The voltage will be 303.54 times larger than the current
- Voltage leads current by 32.21 degrees

Let $\omega = 1$ rad/sec

- 0.1591 Hz
- $\omega = 2\pi f$
- $L = Z, \quad C = 1/Z$

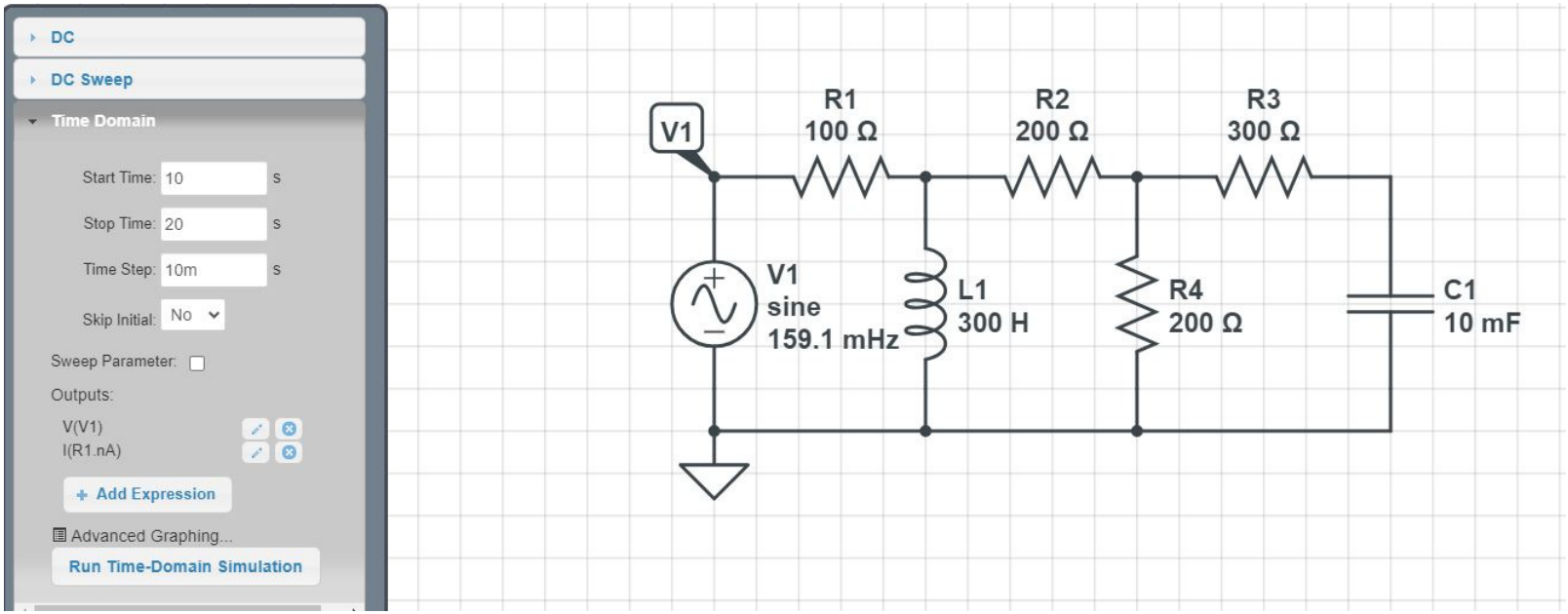

Plot voltage and current

- $Z_{ab} = 303.54\angle 32.21^0$
- The peak voltage is 303 times the peak current
- The peak voltage is 32.21 degrees before the peak current

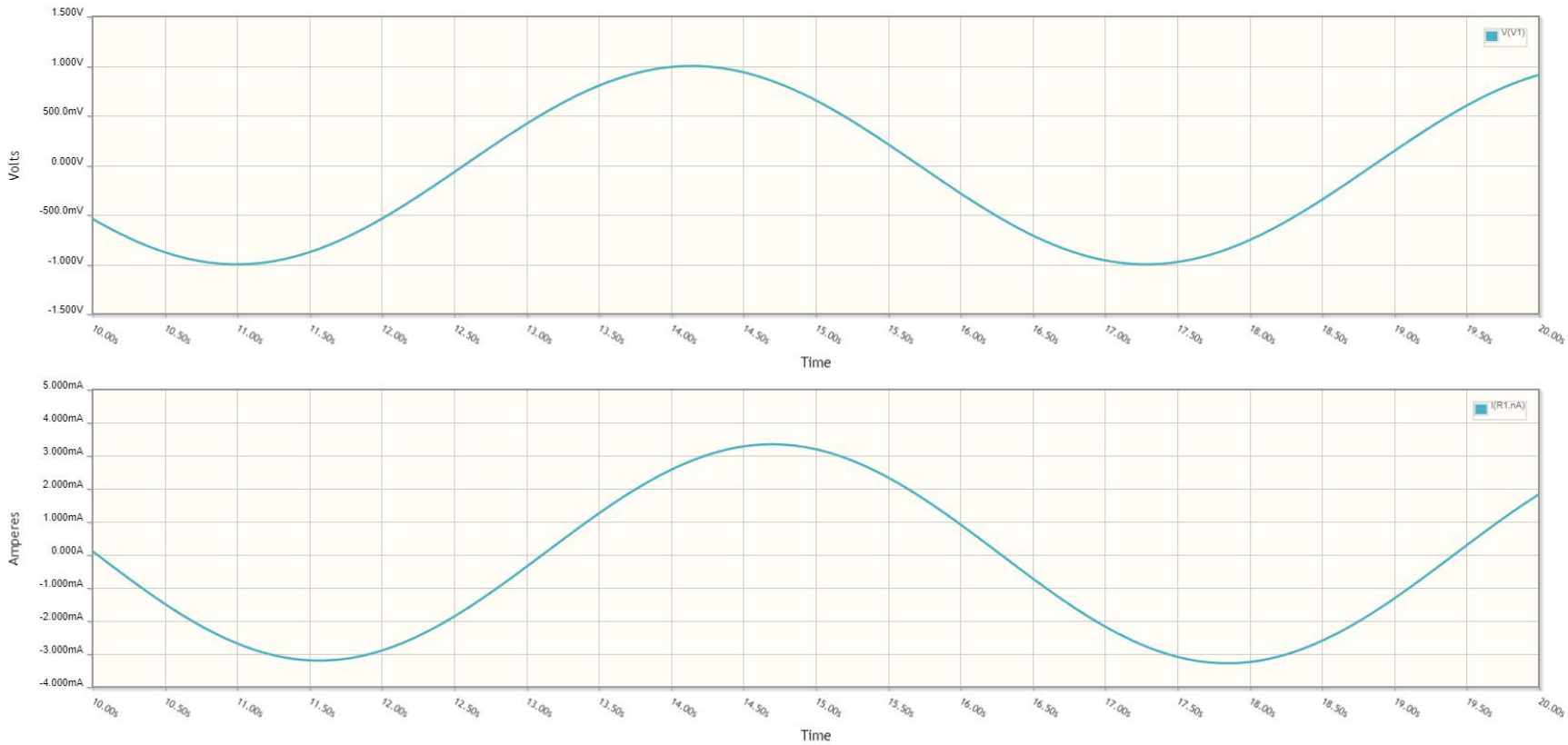

Example 2: Determine Zab

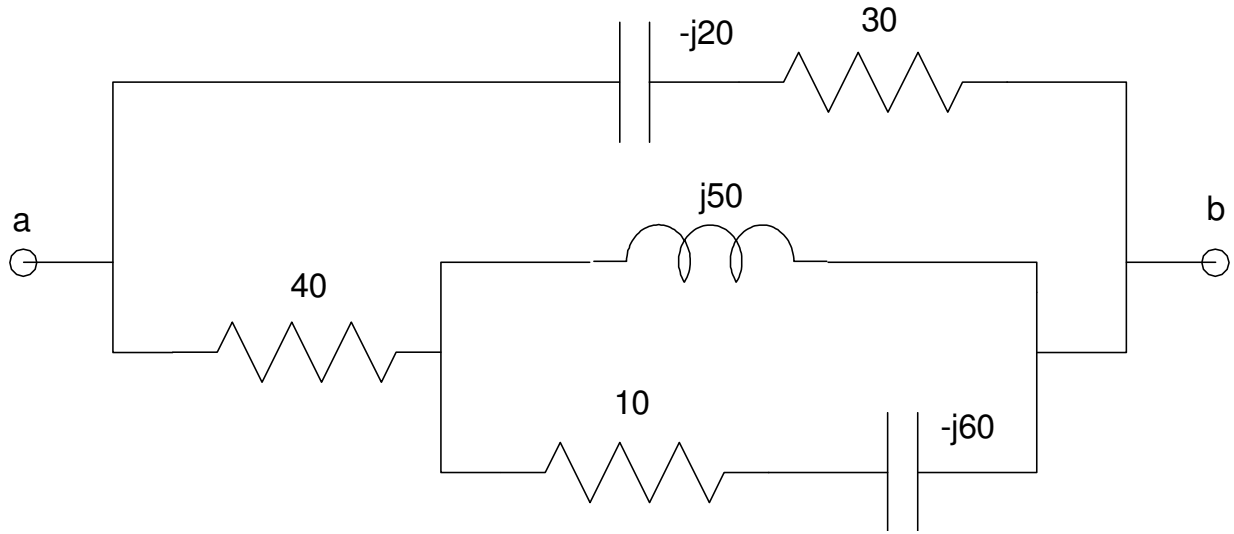

Solution

$$(10)+(-j60)=10-j60$$

$$(10-j60)||(j50)=125.00+j175.00$$

$$(125.00+j175.00)+(40)=165.00+j175.00$$

$$(165.00+j175.00)||(30-j20)=31.42-j14.98$$

answer:

$$Z_{ab}=31.42-j14.98$$

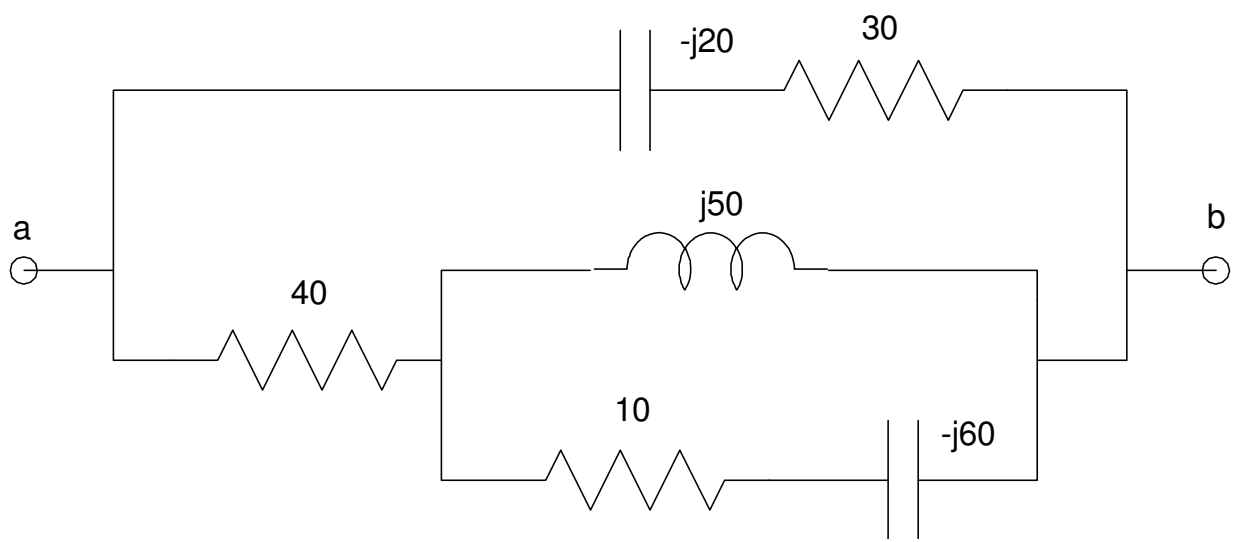

Solve in Matlab:

```
>> Z1 = 10 - j*60

Z1 =  10.0000 -60.0000i

>> Z2 = 1 / (1/Z1 + 1/(j*50))

Z2 =  1.2500e+002 +1.7500e+002i

>> Z3 = Z2 + 40

Z3 =  1.6500e+002 +1.7500e+002i

>> Z4 = 1/( 1/Z3 + 1/(30-j*20) )

Z4 =  31.4263 -14.9799i
```

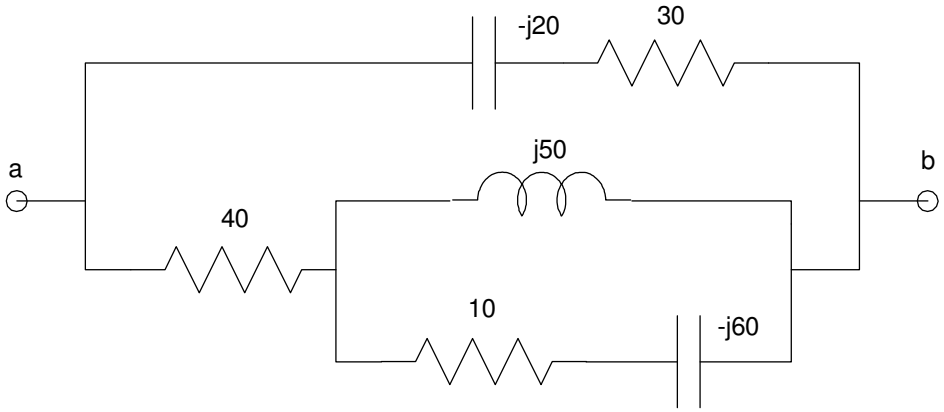

Solve using an HP42

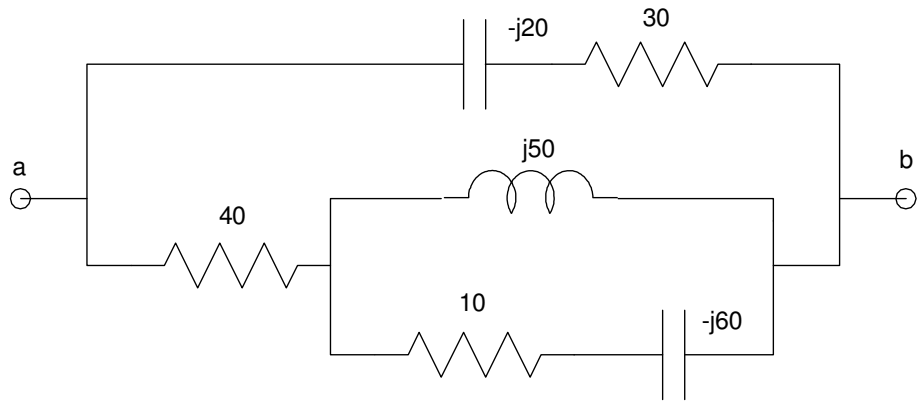


```
10
enter
-60
complex
1/X
0
enter
50
complex
1/X
+
1/X            Z2 = 125 + j175
40
+              Z3 = 165 + j175
1/X
30
enter
-20
complex
1/X
+
1/X            Zab = 31.4263 - j14.9799
```

Solve with CircuitLab:

- Same trick as before: Let $\omega = 1$

$$V = I \cdot (31.4263 - j14.9799)$$

$$V = I \cdot (34.81\angle -25.49^0)$$

This means

- Voltage should be 34.81 times larger than current
- Voltage should lag behind current by 25.49 degrees.

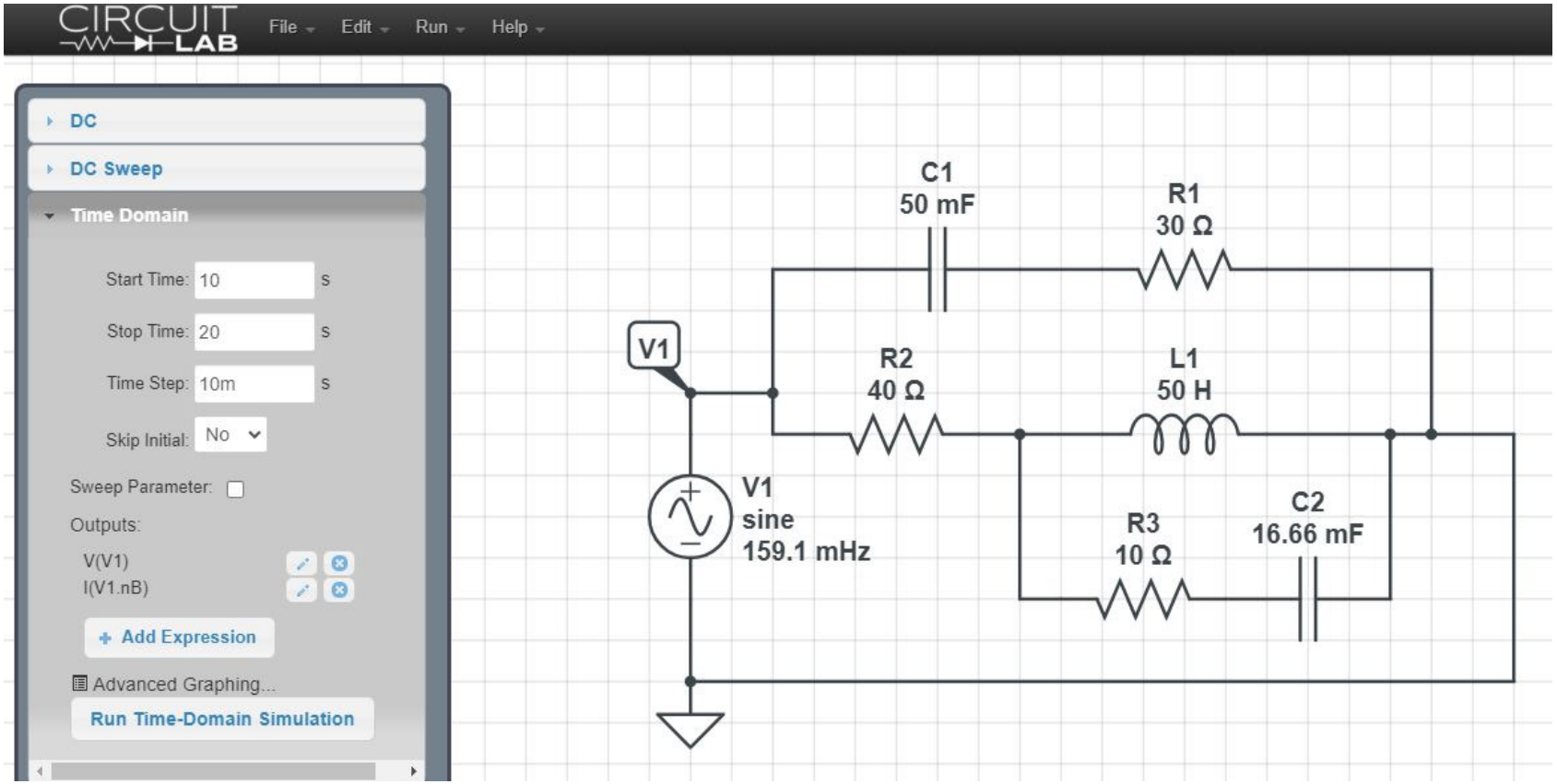

CircuitLab simulation to check the impedance

$Z_{ab} = 34.81\angle -25.49^0$

- Voltage is 34.81 times the current
- Voltage lags current by 25.49 degrees

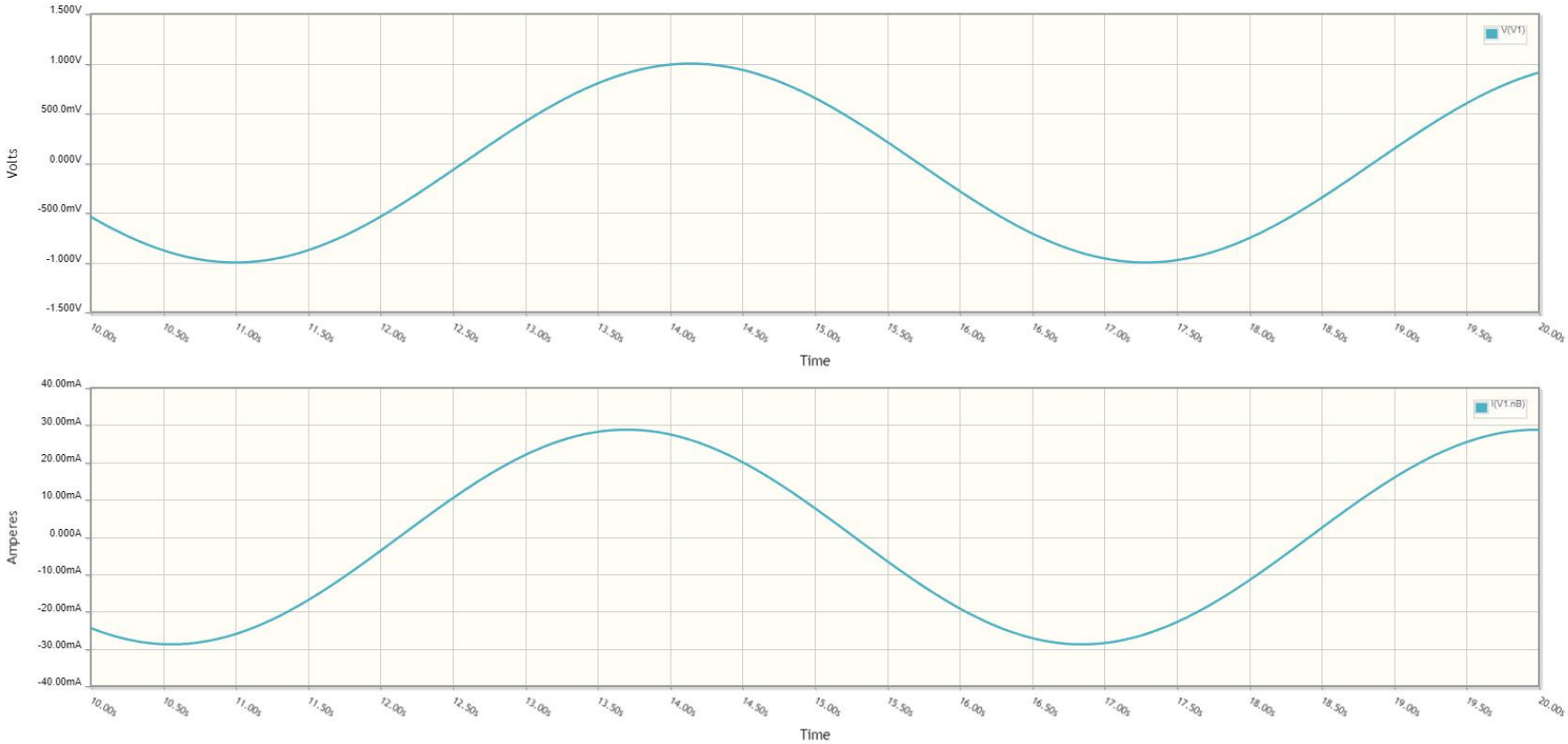

Summary

Real numbers work well when analyzing DC circuits

Complex numbers work well when analyzing AC circuits

Everything that we did with DC circuits with AC circuits - only you wind up with complex numbers

For voltages

- The real part represents the cosine term
- The complex part is represents the minus-sine term

For impedances

- Resistors are real (R)
- Inductors are +jX ($Z = jwL$)
- Capacitors are -jX ($Z = 1/(jwC)$)