Introduction & Syllabus

ECE 211 Circuits I

Please visit Bison Academy for corresponding
lecture notes, homework sets, and solutions

What is Electrical / Computer / Software Engineering?

Electrical Engineering	Computer Engineering	Software Engineering
Devices that use electricity (Electronics, Filters, Interface to a Computer) May or may not include a computer	Software and Hardware tied to a computer Read inputs & control outputs using software Low Level Programming: *Read Sensors* *Drive Actuators* Mid-Level Programming: *Get a quad-copter to hover* *Typical: 100-1000 lines of code*	Focus purely on Software May include some hardware (It helps to know what the program does when you write it) High-Level Programming *Artficial Intelligence* *Get quad-copters to swarm* *Do a gradient search to find the gas leak* *1000+ lines of code*

What is Circuits I?

Gateway Course for ECE majors

- Prerequisite for most courses in ECE

Covers

- Tools for analyzing circuits
- CircuitLab
- Building circuits
  - Breadboards
- Lab tools
  - Multimeters
  - Oscilloscopes

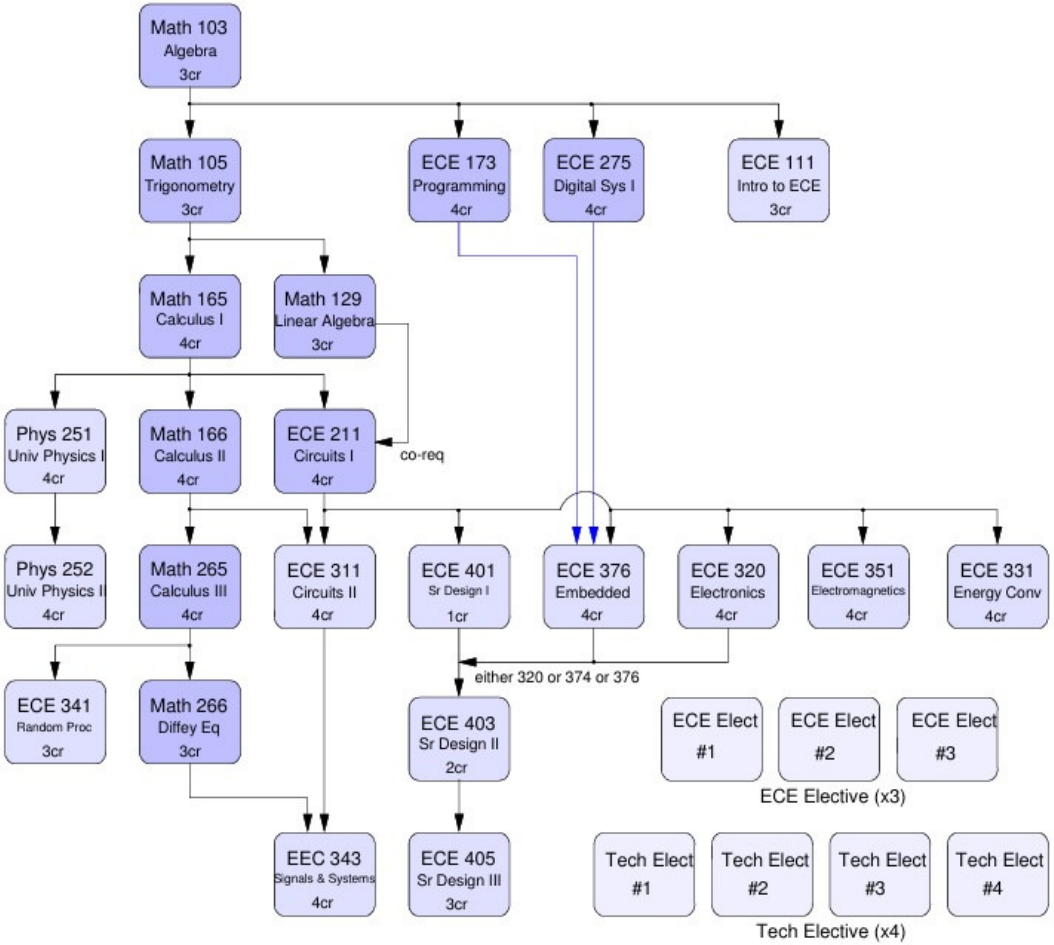

Course Content: Lectures 1-3

- Terminology & Definitions
- Kirchoff's Laws
- Resistors in Series & Parallel

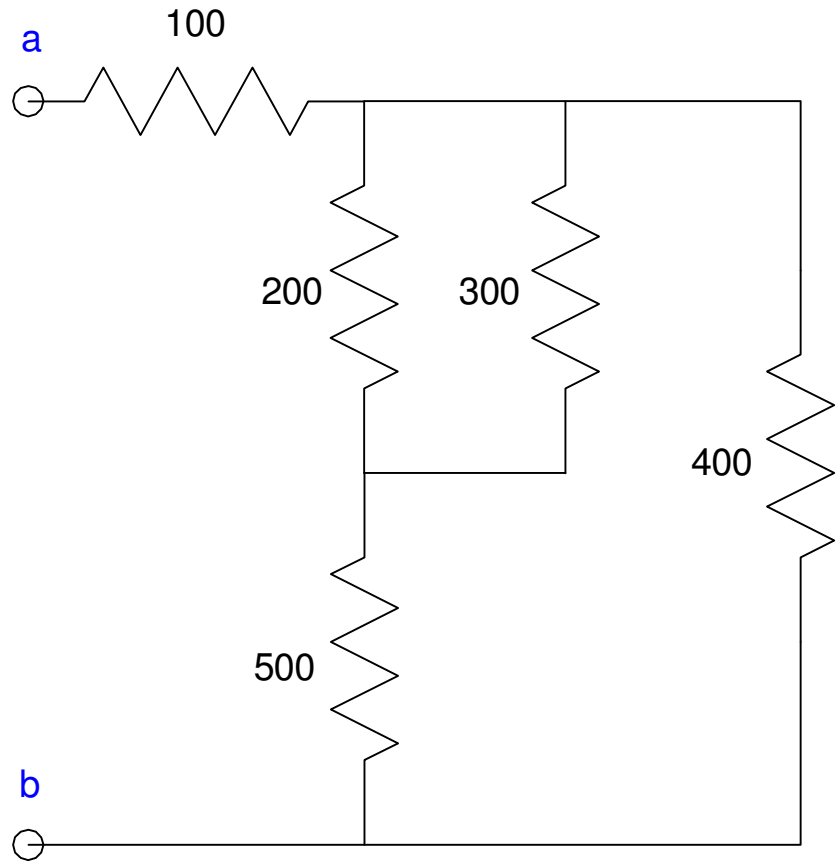

Course Content: Lectures 4-10

DC Circuit Analysis

- Voltage Nodes
- Current Loops
- Thevenin Equivalents

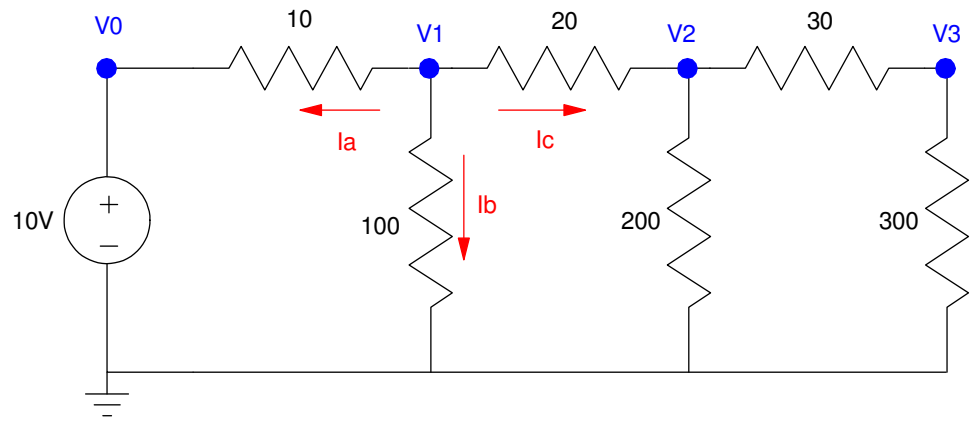

$$Ia + Ib + Ic = 0$$

These are the main tools used throughout ECE courses

- With them, you can analyze pretty much any circuit

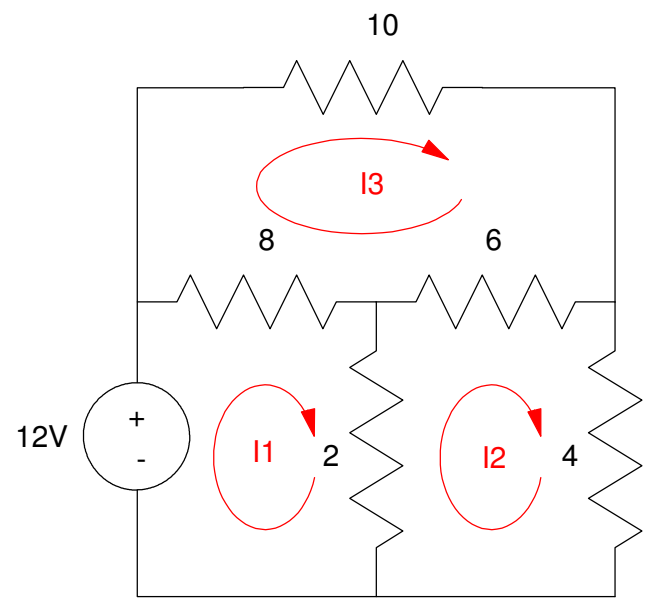

Course Content: Lectures 11-20

- Operational Amplifiers (Op-Amps)
- Op-Amp Circuits
- Capacitors
- Inductors
- Solving differential equations using numerical integration (Matlab)

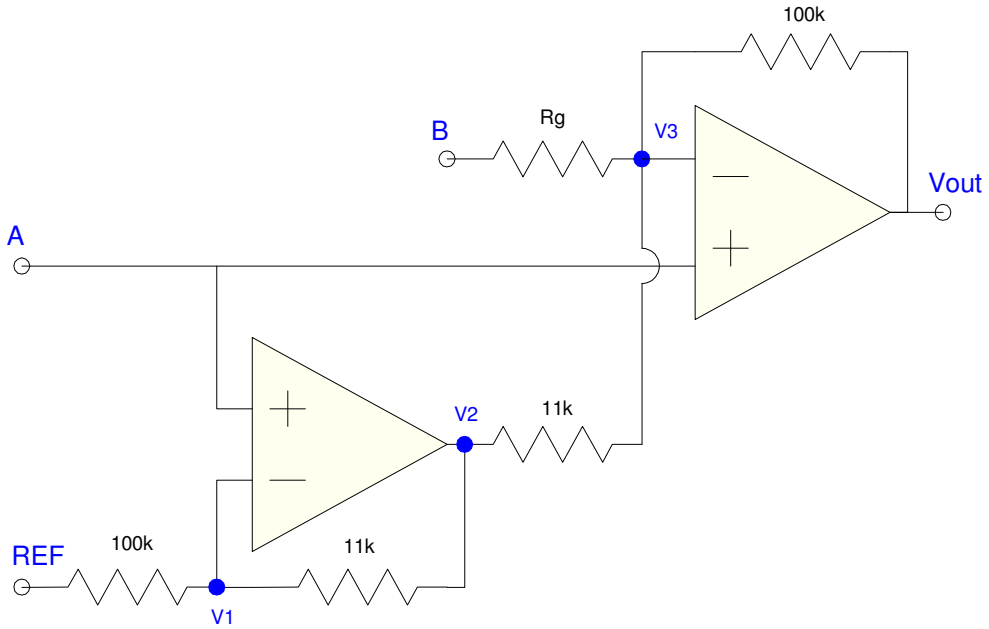

Course Content: Lectures 22 - 32

AC Circuit Analysis

- Complex Numbers
- Phasors
- Circuit Analysis with Phasors
- Filters

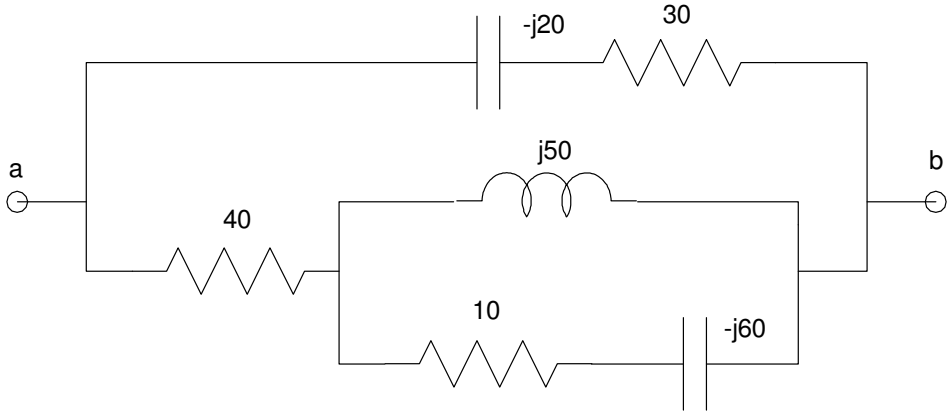

Course Content: Lectures 34-36

Solving Differential Equations

- The p-opeator
- Natural response of RC circuits
- Natural response of RL circuits

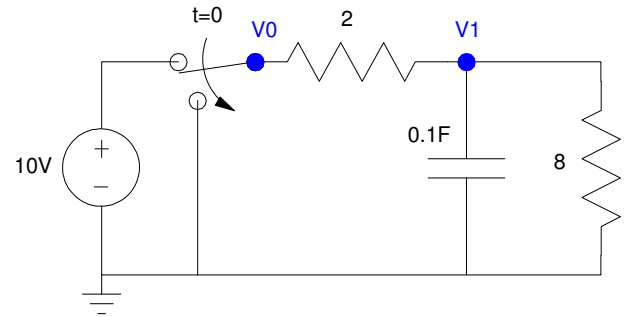

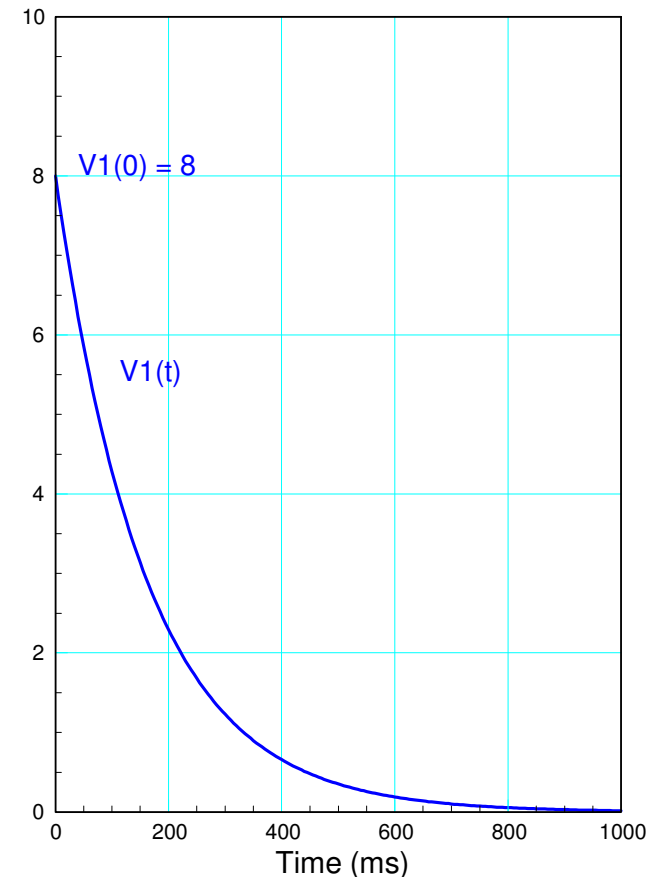

Course Information

Instructor:	Jake Glower
Lecture:	Online
	also available on YouTube
Office:	ECE 201
	Zoom
Office Hours	Monday 8am - Noon (zoom)
	Zoom link posted on BlackBoard under announcements
	Any time via email
	I check my email regularly
	If needed, a zoom link can be opened

Bulletin Description:

Linear electric circuits. Component models, circuit laws, transient analysis, design issues, computer tools. Prereq: MATH 165. Co-req: Math 129

Course Objectives:

By the end of the semester, students should be able to:

- Solve for the currents and voltages in a circuit with steady-state DC and AC inputs.
- Write N equations to solve for N unknowns using Voltage-Nodes and Current-Loop techniques
- Design amplifiers with gains less than one, more than one, and with a negative gain.
- Analyze mathematical functions with complex numbers.
- Use circuit simulators (CircuitLab) to simulate the response of circuits to steady-state inputs.
- Build circuits in lab and measure the steady-state response.

ECE 211 Offerings

Summer:

- On-line only

Fall & Spring:

- In-Person: Students are welcome to addend class at the designated class time and location.
- Live-Stream: Students are also welcome to live-steam the class. A link with how to connect will be sent out at the start of the semester on BlackBoard and to your NDSU email address.
- On-Line: Students are also welcome to take the class on-line and fit lectures into their own schedule.

During Spring and Fall semester, it doesn't matter which section you signed up for

- You can attend however you like
- There's plenty of room

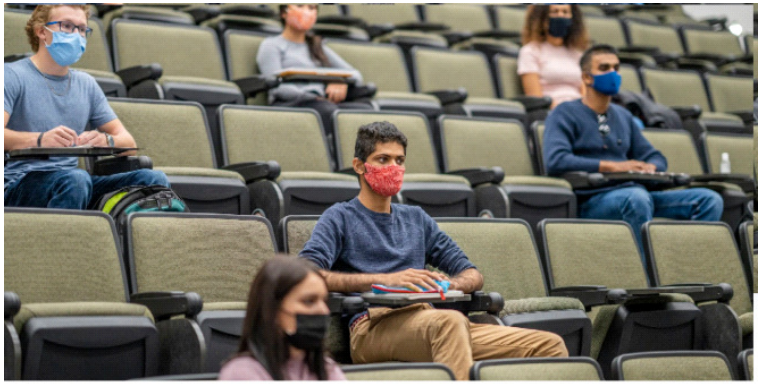

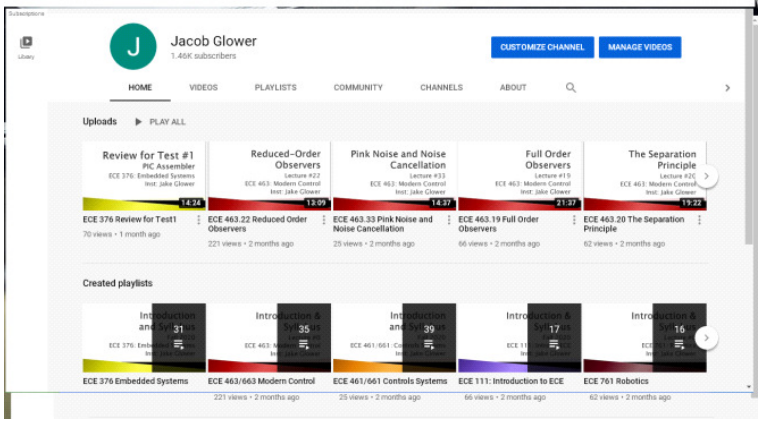

To-Do List

Send me your physical mailing address

- Where to mail the Circuits I lab kit

Download Matlab

- Download from Mathworks
- Free for all NDSU students
- Use your NDSU email address
  - @ndsu.edu works (free)
  - @ndus.edu doesn't work

Register with CircuitLab

- Free for all NDSU students
- Use your NDSU email address
  - @ndsu.edu works (free)
  - @ndus.edu doesn't work

Required Student Resources:

Matlab

- Available on all computers in Engineering
- Also available for personal use
- Download instruction under ECE 111 / Resources

Calculator capable of complex numbers

- Free42: HP42s *highly* recommended
  - $345 on Amazon (DM42)
  - **Free app for your cell phone (Free42)**
  - Worth about 10 points on midterms
  - Does have a learning curve.
- HP-Prime also works
  - $136 from Amazon
  - *can sometimes find on ebay for $50*
  - Also worth about 10 points on midterms
- Most ECE students use TI84 Plus
  - $100 from Amazon

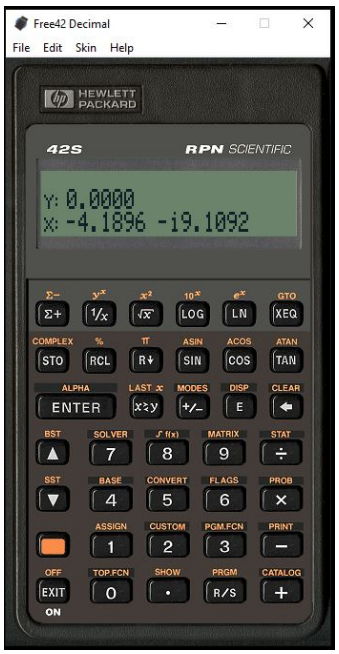

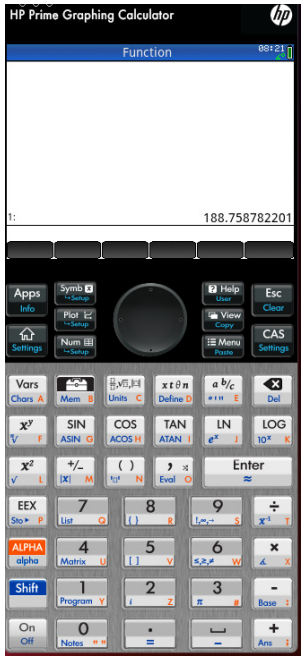

Text Book

- www.BisonAcademy.com (free!)
- Available to all current and former ECE students
  - Good reference if you forget something
- All lectures available: pdf file & YouTube video

Note:

- Bison Academy gives you access
  - To *all* course material
  - Before you take the course
  - While you're taking a course and
  - After you take a course
  - and it's free
- We *want* you to remember (and use) what you learn in each course
- Bison Academy gives you access to this material
  - Whenever you need a refresher
  - *It's used a lot (> 1.8 million hits per year)*

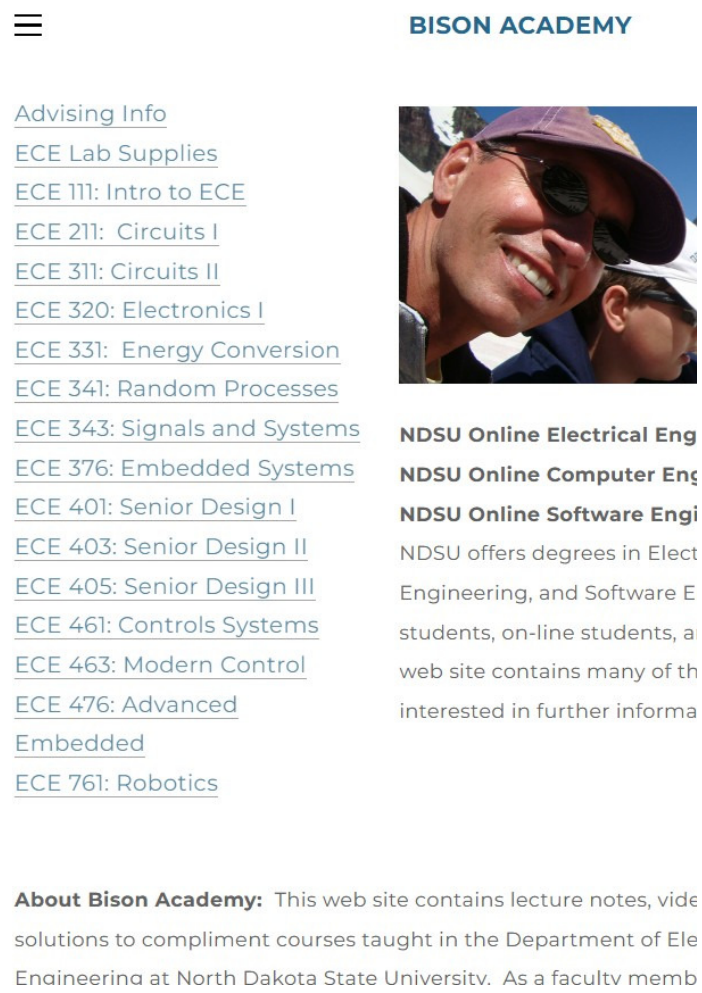

Homework & Solutions

Posted on Bison Academy

- Due before you take the corresponding exams
- Submit on Blackboard or email me
- email: Include ECE 211 in the subject line

Solutions to these homework sets will be available after you submit our solution

- Plus there will be links to YouTube videos were I go over the homework

Homework sets and solutions from previous semesters are also available

- Good resource if you get stuck and need help

ECE 211: Circuits I

Homework and Solutions

Syllabus - HW & Solutions - Resources - Comments

Homework: Sp20	Homework: Sp19
1: Matlab Solution #1	1: Matlab Solution #1
2: Kirchoff$\diamond$s Laws Solution #2	2: Kirchoffs Laws Solution #2
3: Voltage Nodes Solution #3	3: Voltage Nodes Solution #3
4: Current Loops Solution #4	Test #1 Test #1 Solution
Test #1 Test 1 solution Test 1 YouTube	4: Current Loops Solution #4
5: Thevenin Solution #5	5: Thevenin Equiv Solution #5
6: Superposition Solution #6	6: Op Amps Solution #6
7: Op-Amps Solution #7	7: Op Amp Circuits Solution #7
Test #2 Test 2 solution Test 2 YouTube	Test #2 Test #2 Solution
8: Phasors Solution #8 Solution #8 (video)	8: Phasors Solution #8
9: AC Circuit Analysis Solution #9 Solution #9 (youtube)	9: AC Circuit Analysis Solution #9
10: Phasors & OpAmps Solution #10 Solution #10 YouTube	10: Phasors & Op Amps Solution #10

Submitting Homework Sets

Homework can be submitted

- On BlackBoard, or
- Email to the instructor

For electronic submission, MS Word works well

- Copy and paste Matlab code in to MS Word
- Use snipping tool to copy and paste images into Word
- Document that you're using Matlab and got the correct answer

jpg and pdf files are also OK

- As long as I can open and read your file, I'm OK

6) Check your answers in CircuitLab.

- Answers match

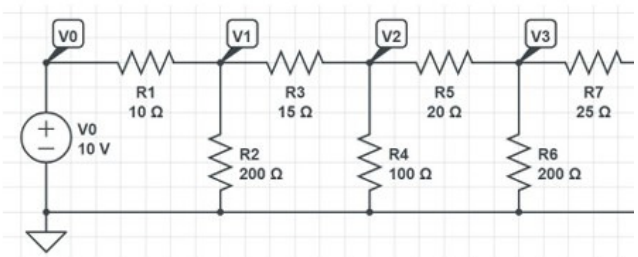

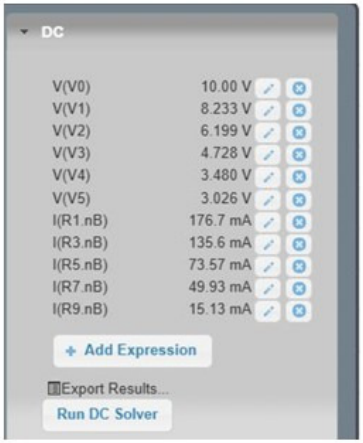

Exams & Class Schedule

Summer is 12-weeks long

- 3-weeks of lectures & homework sets
  - Exam #1
- 3-weeks of lectures & homework sets
  - Exam #2
  - Retake exam #1
- 3-weeks of lectures & homework sets
  - Exam #3
  - Retake exam #1 and #2
- End of summer semester

You can retake exams

- highest-score wins
- last date to take an exam is end of summer semester
- goal: get really good at circuit analysis
  - Makes rest of ECE curriculum a lot easier

Week #1 May 18-22	Syllabus Slides #0 Syllabus
	CircuitLab and Matlab Slides #0
	Terminology & Definitions Slides #1
	Lab Kit FNRSI Multimeter
Week #2 May 25-29	Kirchoffs Laws Slides #2
	Resistors in Series and Parallel Slides #3
	Voltage and Current Division Slides #4
Week #3 June 1-6	Voltage Nodes Slides #5
	Super-Nodes Slides #6
	Current Loops Slides #7
	Super Loops Slides #8
Week #4 June 8-12	Review *
	Test #1 Friday, June 12th
Week #5 June 15-19	Thevenin and Norton Equivalents Slides #10
	Thevenin & Max Power Slides #11
	Superposition Slides #12
	Operational Amplifier Slides #13

CircuitLab

- www.CircuitLab.com

Chegg exists. AI exists.

- These are discouraged in Circuits I
- These are not needed in Circuits I

Use CircuitLab

- To find the answers
  - Voltages & currents
- To check your answers
  - Calculations should match CircuitLab
- To check your designs

CircuitLab is Free for all NDSU students

- Use your NDSU email address
  - Student.Name@NDSU.edu
- Don't use your NDUS email address
  - NDSU only pays for NDSU students
  - NDUS includes UND (hisss)

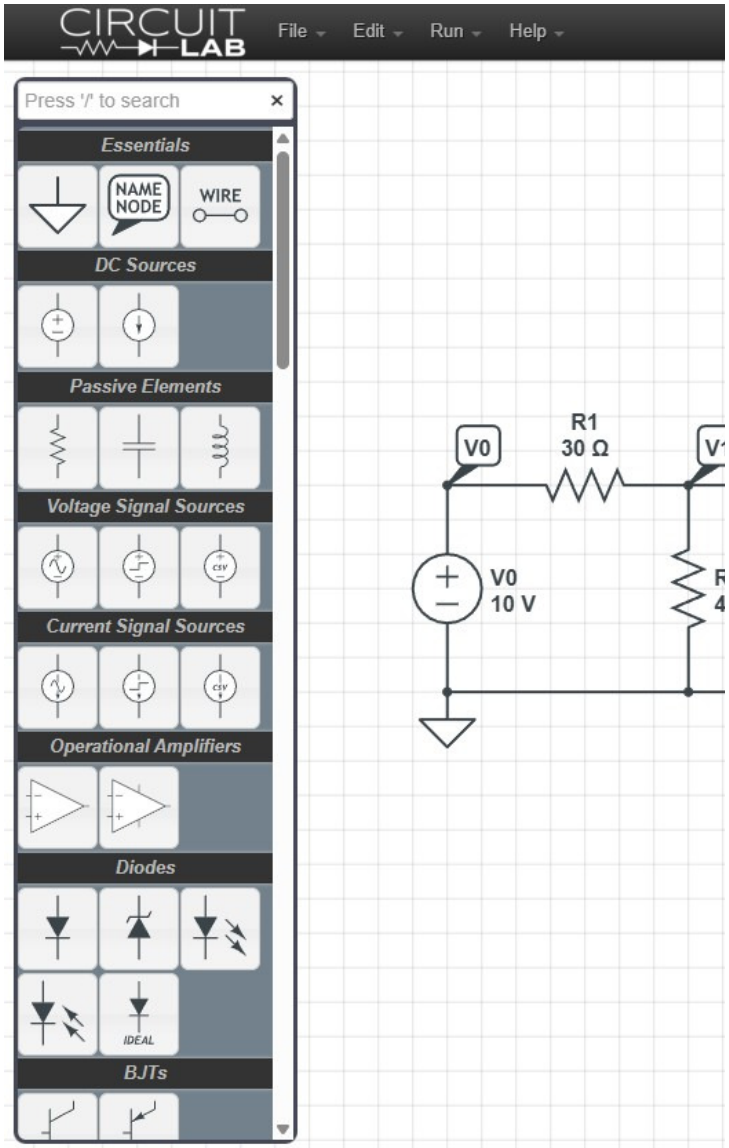

Lab Kits

There is a lab kit for ECE 211

- Free to all students
- Mailed out early May
  - Send me your mailing address
  - One kit per student
  - Contents vary year by year

Description on Bison Academy

- www.BisonAcademy.com/211_lab_kit.html
  - Multimeter - Oscilloscope - Signal Generator
  - FNRST 2C53T
  - Breadboards
  - 5V power supply (digital circuits)
  - 9V rechargable batteries (analog circuits)
  - Resistors - capacitors - wires - etc

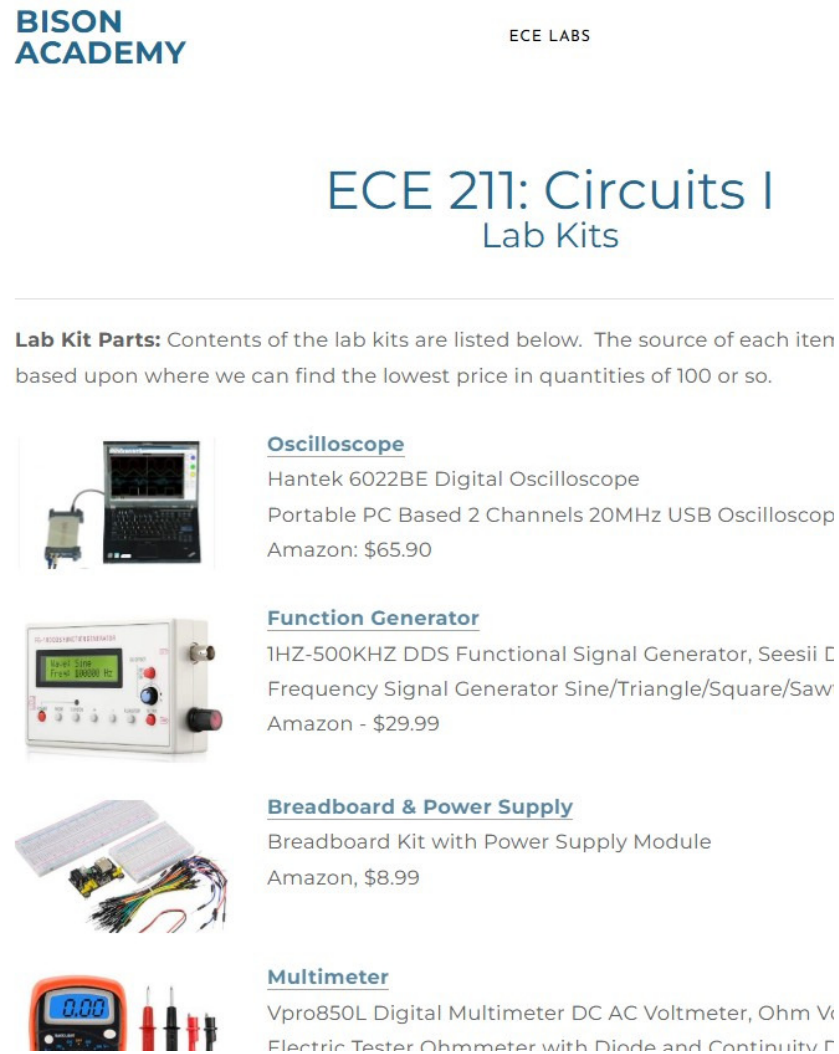

Evaluation Procedures and Grading Criteria

Labs are part of the homework sets

- Analyze a circuit (calculations)
- Simulate with CircuitLab
- Build one or more of the circuits and take measurements
  - Using components from your lab kit
  - Include photos and/or videos

Grades will be the average of the following:

Homework & Labs	Exams (x3)
25%	25% each

Grades are rounded to the nearest 1%, with your final grade being

F	D	C	B	A
59% or less	60% - 69%	70% - 79%	80% - 89%	90% or more

Legal Stuff:

Attendance: According to NDSU Policy 333 (www.ndsu.edu/fileadmin/policy/333.pdf), attendance in classes is expected. Students are responsible for the material covered in class and in assignments regardless of their attendance. Note that all lecture notes, homework sets, and solutions are available on-line at www.BisonAcademy.com

Students with Special Needs: Any students with disabilities or other special needs, who need special accommodations in this course, are invited to share these concerns or requests with the instructor and contact the Disability Services Office (www.ndsu.edu/disabilityservices) as soon as possible.

Academic Honesty: The academic community is operated on the basis of honesty, integrity, and fair play. NDSU Policy 335: Code of Academic Responsibility and Conduct applies to cases in which cheating, plagiarism, or other academic misconduct have occurred in an instructional context. Students found guilty of academic misconduct are subject to penalties, up to and possibly including suspension and/or expulsion. Student academic misconduct records are maintained by the Office of Registration and Records. Informational resources about academic honesty for students and instructional staff members can be found at www.ndsu.edu/academichonesty.

Academic Honesty Defined: All written and oral presentations must "respect the intellectual rights of others. Statements lifted verbatim from publications must be cited as quotations. Ideas, summaries or paraphrased material, and other information taken from the literature must be properly referenced" (Guidelines for the Presentation of Disquisitions, NDSU Graduate School).

ECE Honor Code: On my honor I will not give nor receive unauthorized assistance in completing assignments and work submitted for review or assessment.

Veterans and Student Soldiers: Veterans and student soldiers with special circumstances or who are activated are encouraged to notify the instructor in advance.