Ohm's Law & Kirchoff's Laws

Introduction

In the previous lecture, units of measure in the metric system were introduced along with some basic definitions related to electrical circuits. In this lecture, we'll cover

- Resistance
- Ohm's Law
- Kirchoff's voltage law, and
- Kirchoff's current law

With these laws, we'll look at one way to find the voltages and currents in a given circuit.

Resistance

Resistance is a basic property of materials. Current is the flow of electrons. Resistance is a measure of how freely current can flow in a material.

The basic equation for resistance is

$$R = \frac{\rho L}{A}$$

where

- ρ is the resistivity - a property of the material used to make the wire
- L is the length of wire, and
- A is the cross sectional area of the wire.

Resistivity is a property of the material and varies from 0 for superconductors to infinite for perfect insulators. The reistivity for variou smaterials is presented in Table 1

Material	Resistivity @ 20C Ohm-cm	Comment
Silver	1.59 e-8	Best conductor
Copper	1.68 e-8	
Gold	2.44 e-8	
Nickel	6.99 e-8	
Carbon (graphite)	250 e-8	
Iron	1.0 e-7	
Silicon	2.3 e+3	Semiconductor
Hard rubber	1e+13	Insulator
Quartz	7.5e+17	

Table 1: Resistivity of various materials

For example, suppose you run a transmission line from Dickenson to Minneapolis. Assume

- Copper wire: $\rho = 1.68 \cdot 10^{-8} \Omega cm$
- L = 1000km (the distance from Dickenson to Minneapolix), and
- A = 1cm^2.

The resistance of that wire will be

$$R = \frac{(1.68e{-}8\Omega cm)\left(\frac{1m}{100cm}\right)(1e6m)}{(0.01m)^2} = 1.678\Omega$$

When a utility runs transmission lines over this distance, they have to take into account that wire's resistance.

Figure 2: 1000km of 1cm diameter copper wire has a resistance of 1.678 Ohms

As another example, wires on printed circuit boards also have resistance. Assume a trace has

- Length = 4cm
- Width = 1mm
- Thickness = 35um, and
- The material is copper (1oz copper)

The resistance of this trace can be found using

$$R = \frac{\rho L}{A}$$

$$R = \frac{(1.68e{-}8\Omega m)(4e{-}2m)}{(1e{-}3m)(35e{-}6m)} = 0.0192\Omega$$

The resistance of a trace on a circuit board is *almost* zero, but not quite.

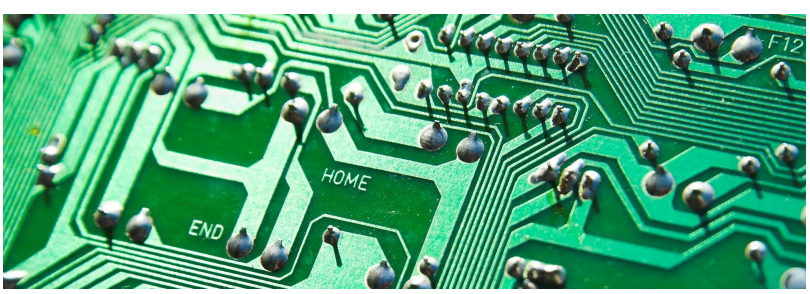

Figure 3: A circuit board trace that's 4cm long and 1mm wide has a resistance of 0.0192 Ohms

Resistors used in labs are labeled with color bands. For example, a 5% tolerance resistor might look like the following:

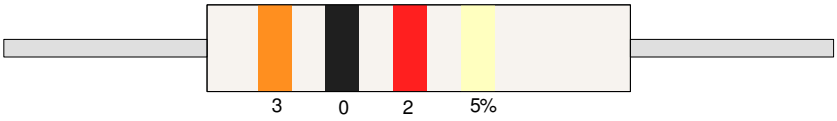

Figure 4: Four-band resistor. The colors specify the value and the tolerance of the resistor

The first three bands use color to represent numbers as presented in Table 6.

0	1	2	3	4	5	6	7	8	9
black	brown	red	orange	yellow	green	blue	violet	grey	white

Table 2: Standard color code for labeling resistors (first three to four color bands)

The last band tells you the tolerange of the resistor (how much the actual value may vary):

Silver	Gold	Red	Brown	Green
+/- 10%	+/- 5%	+/- 2%	+/- 1%	+/- 0.5%

Table 3: Standard meaning for the last color band of resistors: the tolerance of the resistor

For the first three color bands,

- The first two determine the mantessa of the resistor's value (30 in this case)
- The next to last color band determines the exponent (2 or 10^2 in this case)
- The last band determines the tolerange (gold of 5% here).

For example, the following four resistors are

- 510 Ohms (51 * 10^1)
- 6.8k Ohms (68 * 10^2)
- 47k Ohms (47 * 10^3)
- 210k Ohms (21 * 10^4)

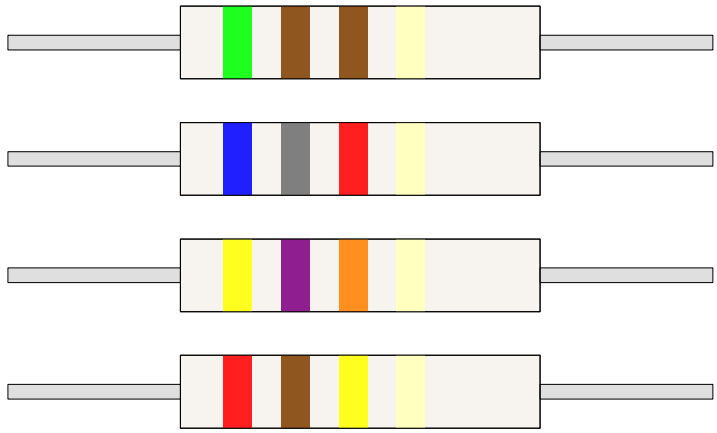

Figure 5: Color codes for restors with values of 510, 6.8k, 47k, and 210k Ohms

Ohm's Law

Definition

The basic equation relating voltage, current, and resistance is Ohms law:

$$V = I \cdot R$$

This assumes the passive sign convention where current flows into the plus side of the voltage:

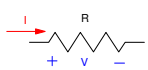

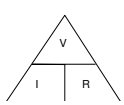

Figure 6: Passive sign convention: Current goes into the plus side of voltage

This also leads to the equations

$$I = \frac{V}{R} \qquad \text{Amps}$$

$$R = \frac{V}{I} \qquad \text{Ohms}$$

One way to remember this is with the triangle in Figure 3

- Voltage over current is resistance
- Voltage over resistance is current
- Current times resistance is voltage

With this sign convention, the power dissipated by a resistor is

$$P = V \cdot I \qquad \text{Watts}$$

Other versions of this can be found by substituting Ohms law for voltage or current:

$$P = \frac{V^2}{R}$$

$$P = I^2 R$$

From these, given two terms from voltage, current, resistance, and power, you can compute the remaining two.

For example, consider the previous wire that connects Dickenson to Minneapolis (a 1000km wire with 167.8 Ohms resistance).

a) If you transmit 100A of current across this wire, what is the voltage drop and how much power is dissiapted?

- R = 1.678 Ohms
- I = 100A

answer: The voltage drop comes from Ohms law:

$$V = IR$$

$$V = 100A \cdot 1.678\Omega$$

$$V = 167.8V$$

The power dissipated is

$$P = VI = \frac{V^2}{R} = I^2 R$$

$$P = 167.8V \cdot 100A$$

$$P = 16.78kW$$

Transmitting large amounts of current over long distances is expensive and inefficient.

Example 2: Assume a circuit board trace has a resistance of 0.0192 Ohms. What is the voltage drop and current required for this trace to dissipate 2W of power?

Answer: Use one of the variants of power:

$$P = I^2 R$$

$$2W = I^2 \cdot 0.0192\Omega$$

$$I = 10.206A$$

The voltage drop will be

$$V = IR$$

$$V = 10.206A \cdot 0.0192\Omega$$

$$V = 196mV$$

There are other ways to get these answers, but the results should be the same.

Using Ohm's Law to Find Current

One common use of Ohm's law is trying to measure the current in a circuit. For example, suppose you want to measure the current through an LED:

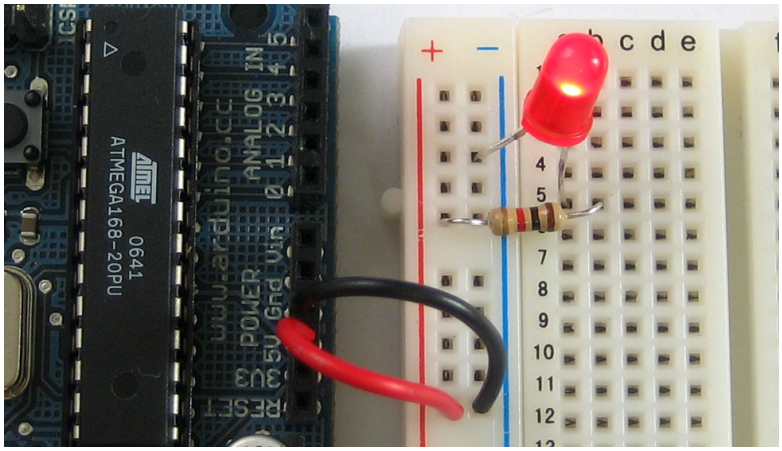

Figure 7: Measure the current through an LED

At first glance, since you want to measure current, you might want to use an ammeter. There are several problems with this, however.

- First, to measure current, you need to disconnect the above circuit and place the ammeter in series with the LED. With simple breadboard circuits like this, that's not too difficult. For more complex circuits - especially ones that have been soldered - this can be an issue.
- Second, finding a working ammeter is hard. At the start of the semester, all ammeters in the department have new fuses and have been checked. By week #2, pretty much all of the fuses are blown.

The problem with ammeters is they have very low resistance - ideally zero. That means that if you every accidently use an ammeter as a volt meter - say by placing it across the above resistor - the current goes to infinity and the fuse blows.

So, how do you measure current if you can't measure current directly?

This is where Ohm's law comes into play. Volt meters are pretty reliable. The impedance of a volt-meter is large - ideally infinity. This large impedance keeps the current draw for volt meters close to zero - meaning there isn't a problem with blowing fuses with volt maters.

In the above circuit, the resistance is 1k Ohms (brown - black - red). If you measure 3.10V across this resistor, you can compute the current flow:

$$I = \left(\frac{3.10V}{1k\Omega}\right) = 3.10mA$$

Kirchoff's Laws

Kirchoff's laws simply restate the conservation of voltage and current:

- If you sum the voltages around any closed path, the sum must be zero.
- If you sum the current flowing away from a point, the sum must be zero.

Kirchoff's Voltage Law:

If you take a volt meter and tough the two leads together, you should get 0V. Likewise, if you measure the voltages around any closed path and wind up where you started, the sum of all these voltages must be zero. That is Kirchoff's voltage law:

The sum of voltage around any closed path must be zero.

For example, consider the following circuit. From Kirchoff's voltage law, the voltages must sum to zero. . To show this, pick your starting point: the lower left corner. Then go all the way around the circuit, ending where you started. To be consistent

- Add when you encounter a plus sign first,
- Subtract when you encounter a minus sign first.

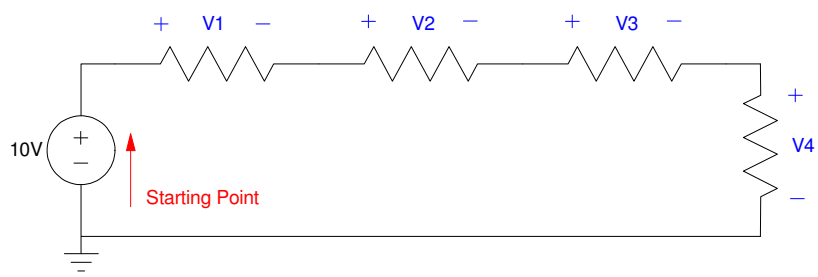

Figure 8: Kirchoff's Voltage Law: The voltages must sum to zero

Going arount his circuit, you get

$$-10V = V_1 + V_2 + V_3 + V_4$$

Where this helps is with more complicated circuits like Figure 5. With this circuit, the votlages must sum to zero around each and every closed path. If there are unknown voltages, you can figure out what they are by trying to find a closed path where there is one unknown. Sort of like solving a Soduku puzzle.

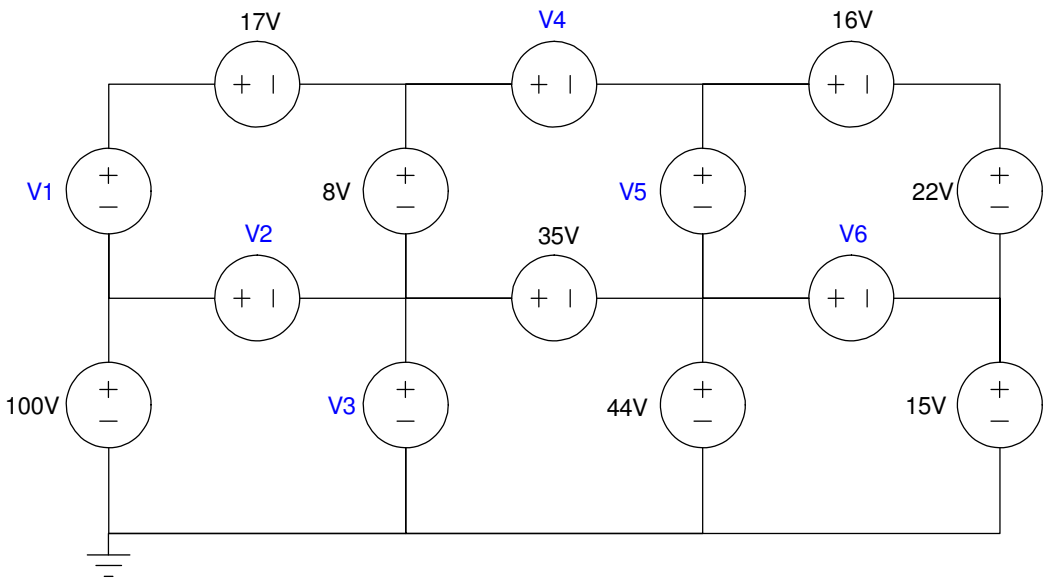

Figure 9: Use Kirchoff's voltage law to determine the unknown voltages

To find the unknown voltages, look for a closed-path which has one unknown. Two paths are shown in Figure 6:

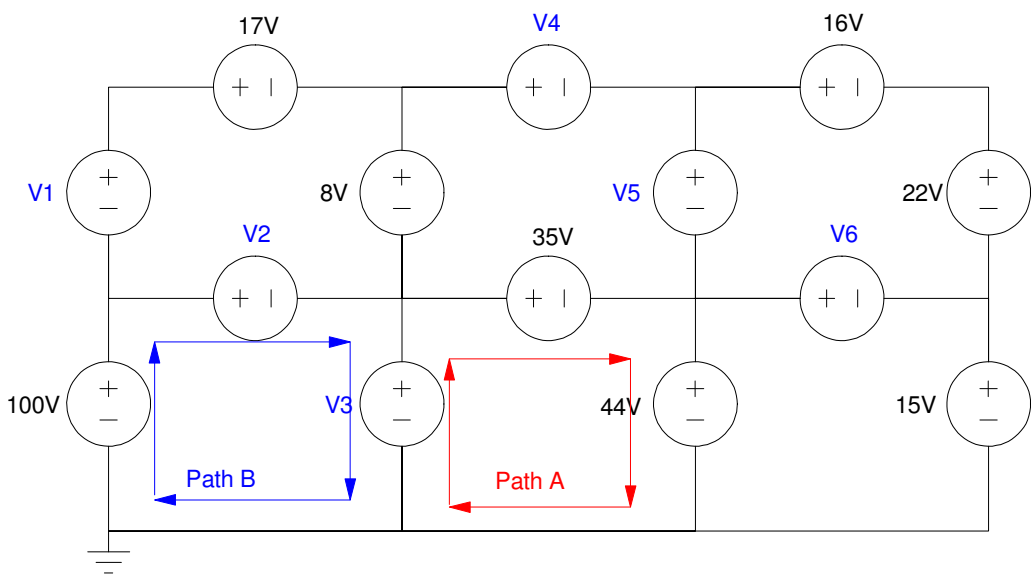

Figure 10: Look for a closed-path where this is only one unknown voltage

For example, around path A, starting in the lower-left corner, you get

$$-V_3 + 35 + 44 = 0$$

$$V_3 = 79V$$

Once you know V3, you can find V2. Going around path B, again starting in the lower-left corner

$$-100V + V_2 + V_3 = 0$$

$$V_2 = 21V$$

Repeating for the other voltages, you should get the following

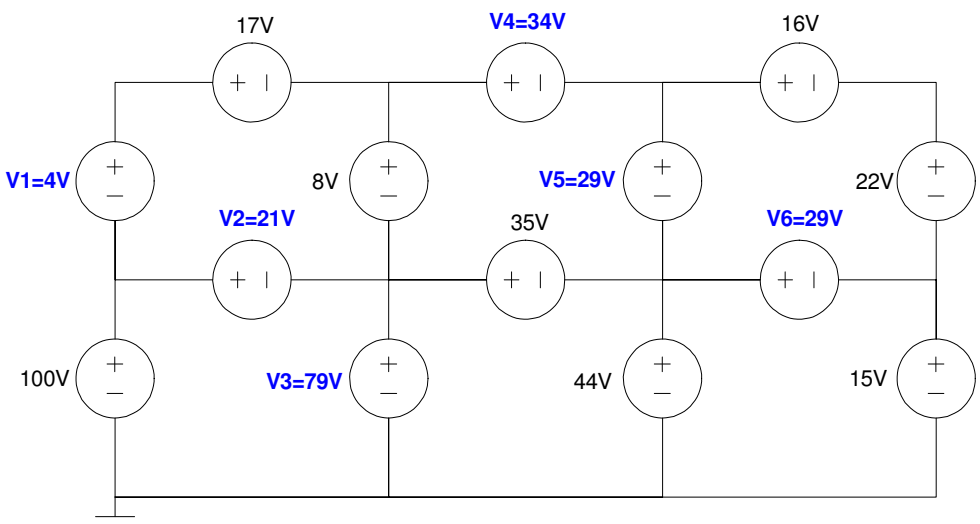

Figure 11: Voltages computed using Kirchoff's voltage law.

Kirchoff's Current Law

Current is the flow of electrons. Unless you are creating matter, the sum of the current from (or to) a given node must be zero. That is Kirchoff's Current Law:

> **The sum of all currents from a node must be zero**

or said another way

> **For any circuit, the current flowing into a node must be equal to the current flowing from the node (current in = current out).**

You can use this to find unknown currents.

For example, determine the unknown currents in Figure xx using conservation of current

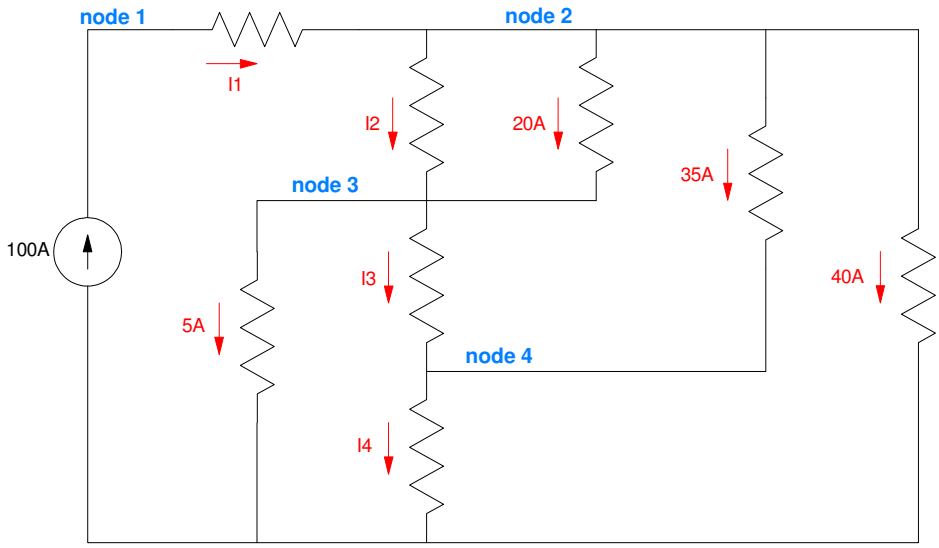

Figure 12: Find the unknown currents using conservation of current

The trick here is to find a node where there is one unknown current flowing to or from the node. Start with node #1.

Using the equation

Current In = Current Out

you get

$$100A = I_1$$

Next, go to node #2.

Current In = Current Out

$$100A = I_2 + 20A + 35A + 40A$$

This gives I2 = 5A

Now go to node #3

Current In = Current Out

5A + 20A = 5A + I3

This gives I3 = 20A

Finally, go to node #4

Current In = Current Out

20A + 35A = I4

This gives I4 = 55A

As a check, currents have to balance at the bottom node

Current In = Current Out

5A + I4 + 40A = 100A

5A + 55A + 40A = 100A

100A = 100A

This checks out.

Example:

Assume a 9V battery drives three LEDs. The voltages in the circuit are as shown. Determine

- The current through each LED,
- The power dissipated by each LED, and
- The total current delivered by the 9V battery.

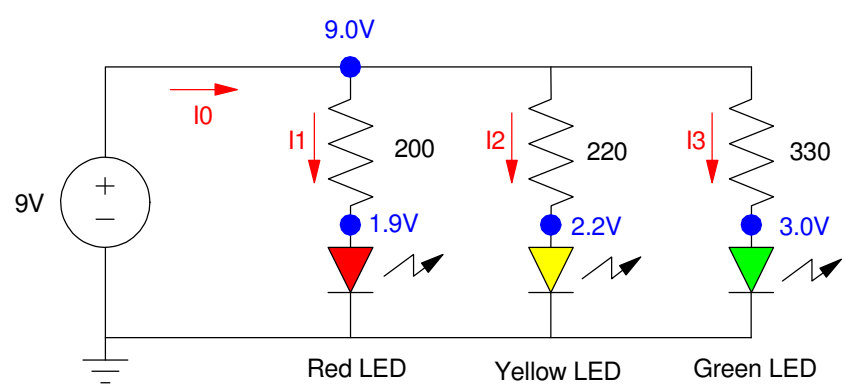

Figure 13: Given the voltages and resistances, find the curents

Solution: From Ohm's law

$$I_1 = \left(\frac{9V - 1.9V}{200\Omega}\right) = 35.5mA$$

$$I_2 = \left(\frac{9V - 2.2V}{220\Omega}\right) = 30.91mA$$

$$I_3 = \left(\frac{9V - 3.0V}{330\Omega}\right) = 18.18mA$$

From conservation of current

$$I_0 = I_1 + I_2 + I_3$$

$$I_0 = 84.59mA$$

The power dissipated by the red LED is

$$P_{red} = V_r I_r$$

$$= 1.9V \cdot 35.5mA$$

$$= 67.45mW$$

For the yellow LED

$$P_y = V_y I_y$$

$$= 2.2V \cdot 30.91mA$$

$$= 68.00mW$$

For the green LED

$$P_g = V_g I_g$$

$$= 3.0V \cdot 18.18mA$$

$$= 54.54mW$$

The power delivered by the 9V source is

$$P_{in} = 9.0V \cdot 84.59mA$$

$$= 761.3mW$$

As a sidelight, efficiency of this circuit is

$$eff = \left(\frac{\text{power out}}{\text{power in}}\right)$$

$$= \left(\frac{67.45mW + 68.00mW + 54.54mW}{761.3mW}\right)$$

$$= 24.96\%$$

This isn't a very efficient way to drive LEDs. The main problem is we're using a 9V source to drive a load that has a 1.9V to 3.0V drop across it. Most of the voltage (and power) is dissipated by the resistors.

Summary

Kirchoff's laws are conservation of voltage and current

Conservation of Voltage

- The sum of the voltages around any closed path must be zero

Conservation of Current

- The sum of all currents from a node must be zero
- Current in = Current out

These will be the bases for many techniques used in this class to analyze circuits